B LOSS COEFFICIENT TABLES

Duct Cross Section to which Coefficient "C" is referenced is at the top of each table. Negative numbers indicate that the static regain exceeds the dynamic pressure loss of the fitting.

Table 6-6 LOSS COEFFICIENTS, ELBOWS

Use the velocity pressure (V_p) of the upstream section. Fitting loss (TP) = C × V_p

A. Elbow, Smooth Radius (Die Stamped), Round (2)

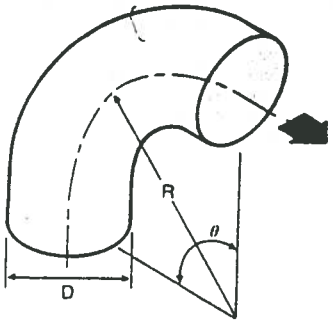

Coefficients for 90° Elbows: (See Note 1)

R/D	0.5	0.75	1.0	1.5	2.0	2.5
C	0.71	0.33	0.22	0.15	0.13	0.12

Note 1: For angles other than 90° multiply by the following factors:

θ	0°	20°	30°	45°	60°	75°	90°	110°	130°	150°	180°
K	0	0.31	0.45	0.60	0.78	0.90	1.00	1.13	1.20	1.28	1.40

B. Elbow, Round, 3 to 5 pc — 90° (2)

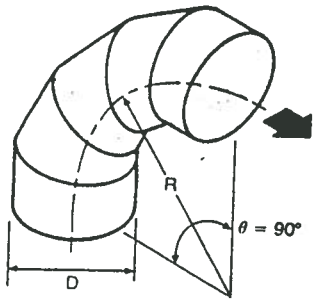

Coefficient C

No. of Pieces	R/D 0.5	0.75	1.0	1.5	2.0
5	—	0.46	0.33	0.24	0.19
4	—	0.50	0.37	0.27	0.24
3	0.98	0.54	0.42	0.34	0.33

C. Elbow, Round, Mitered (15)

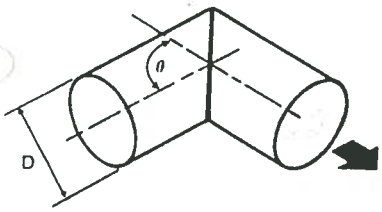

Coefficient C (See Note 2)

θ	20°	30°	45°	60°	75°	90°
C	0.08	0.16	0.34	0.55	0.81	1.2

Note 2: Correction factor for Reynolds number — K_{Re}

R_e 10^{-4}	1	2	3	4	6	8	10	≥ 14
K_{Re}	1.40	1.26	1.19	1.14	1.09	1.06	1.04	1.0

For Standard Air:
R_e = 8.56 DV

where:
D = duct diameter, inches
V = duct velocity, fpm

Reynolds Number Correction Factor Chart

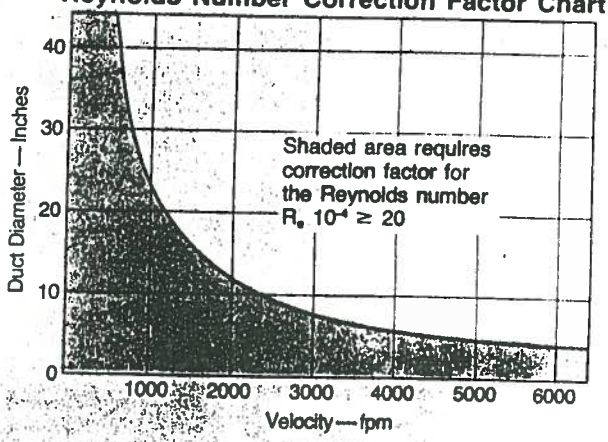

Table 6-6 LOSS COEFFICIENTS, ELBOWS (Cont.)
Use the velocity pressure (V_p) of the upstream section. Fitting loss (TP) = C × V_p

D. Elbow, Rectangular, Mitered (15)

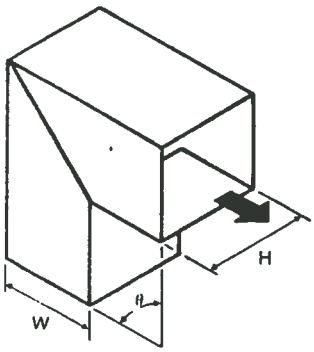

Coefficient C (See Note 2 — Page 6.13)

θ	H/W										
	0.25	0.5	0.75	1.0	1.5	2.0	3.0	4.0	5.0	6.0	8.0
20°	0.08	0.08	0.08	0.07	0.07	0.07	0.06	0.06	0.05	0.05	0.05
30°	0.18	0.17	0.17	0.16	0.15	0.15	0.13	0.13	0.12	0.12	0.11
45°	0.38	0.37	0.36	0.34	0.33	0.31	0.28	0.27	0.26	0.25	0.24
60°	0.60	0.59	0.57	0.55	0.52	0.49	0.46	0.43	0.41	0.39	0.38
75°	0.89	0.87	0.84	0.81	0.77	0.73	0.67	0.63	0.61	0.58	0.57
90°	1.3	1.3	1.2	1.2	1.1	1.1	0.98	0.92	0.89	0.85	0.83

E. Elbow, Rectangular, Mitered with Converging or Diverging Flow (15)

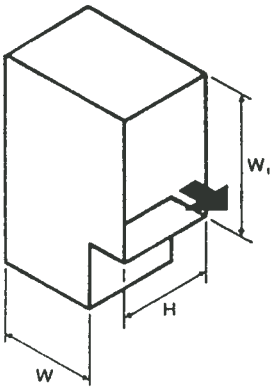

Coefficient C (See Note 2 — Page 6.13)

H/W	W_1/W					
	0.6	0.8	1.2	1.4	1.6	2.0
0.25	1.8	1.4	1.1	1.1	1.1	1.1
1.0	1.7	1.4	1.0	0.95	0.90	0.84
4.0	1.5	1.1	0.81	0.76	0.72	0.66
∞	1.5	1.0	0.69	0.63	0.60	0.55

F. Elbow, Rectangular, Smooth Radius without Vanes (15)

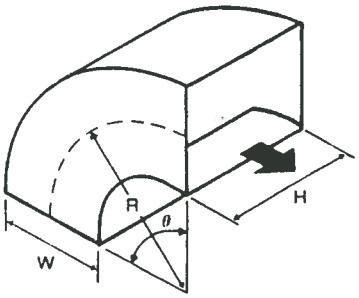

Coefficients for 90° elbows: (See Note 1)

Coefficient C (See Note 3)

R/W	H/W										
	0.25	0.5	0.75	1.0	1.5	2.0	3.0	4.0	5.0	6.0	8.0
0.5	1.5	1.4	1.3	1.2	1.1	1.0	1.0	1.1	1.1	1.2	1.2
0.75	0.57	0.52	0.48	0.44	0.40	0.39	0.39	0.40	0.42	0.43	0.44
1.0	0.27	0.25	0.23	0.21	0.19	0.18	0.18	0.19	0.20	0.27	0.21
1.5	0.22	0.20	0.19	0.17	0.15	0.14	0.14	0.15	0.16	0.17	0.17
2.0	0.20	0.18	0.16	0.15	0.14	0.13	0.13	0.14	0.14	0.15	0.15

Note 3: Correction Factor for Reynolds number — K_{Re}

R/W	R_e 10^{-4}								
	1	2	3	4	6	8	10	14	≥20
0.5	1.40	1.26	1.19	1.14	1.09	1.06	1.04	1.0	1.0
≥0.75	2.0	1.77	1.64	1.56	1.46	1.38	1.30	1.15	1.0

$$D = \frac{2\,HW}{H+W}$$

For Standard Air:
$R_e = 8.56\ DV$

where:
D = duct diameter, inches
V = duct velocity, fpm

Table 6-6 LOSS COEFFICIENTS, ELBOWS (Cont.)

Use the velocity pressure (V_p) of the upstream section. Fitting loss (TP) = C × V_p

G. Elbow, Rectangular, Smooth Radius with Splitter Vanes (2)

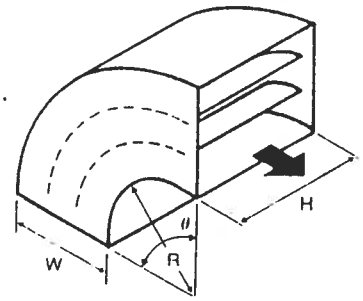

NOTES FOR THIS FIGURE ONLY:
A) See Page 5.12 to calculate splitter vane spacing.
B) CR = Curve Ratio
C) Use correction factors in Note 1 on Page 6.13 for elbows other than 90°.

			Coefficient C										
			H/W										
	R/W	CR	0.25	0.5	1.0	1.5	2.0	3.0	4.0	5.0	6.0	7.0	8.0
1 splitter vane	0.05	0.218	0.52	0.40	0.43	0.49	0.55	0.66	0.75	0.84	0.93	1.0	1.1
	0.10	0.302	0.36	0.27	0.25	0.28	0.30	0.35	0.39	0.42	0.46	0.49	0.52
	0.15	0.361	0.28	0.21	0.18	0.19	0.20	0.22	0.25	0.26	0.28	0.30	0.32
	0.20	0.408	0.22	0.16	0.14	0.14	0.15	0.16	0.17	0.18	0.19	0.20	0.21
	0.25	0.447	0.18	0.13	0.11	0.11	0.11	0.12	0.13	0.14	0.14	0.15	0.15
	0.30	0.480	0.15	0.11	0.09	0.09	0.09	0.09	0.10	0.10	0.11	0.11	0.12
	0.35	0.509	0.13	0.09	0.08	0.07	0.07	0.08	0.08	0.08	0.08	0.09	0.09
	0.40	0.535	0.11	0.08	0.07	0.06	0.06	0.06	0.06	0.07	0.07	0.07	0.07
	0.45	0.557	0.10	0.07	0.06	0.05	0.05	0.05	0.05	0.05	0.06	0.06	0.06
	0.50	0.577	0.09	0.06	0.05	0.05	0.04	0.04	0.04	0.05	0.05	0.05	0.05
2 splitter vanes	0.05	0.362	0.26	0.20	0.22	0.25	0.28	0.33	0.37	0.41	0.45	0.48	0.51
	0.10	0.450	0.17	0.13	0.11	0.12	0.13	0.15	0.16	0.17	0.19	0.20	0.21
	0.15	0.507	0.12	0.09	0.08	0.08	0.08	0.09	0.10	0.10	0.11	0.11	0.11
	0.20	0.550	0.09	0.07	0.06	0.05	0.06	0.06	0.06	0.06	0.07	0.07	0.07
	0.25	0.585	0.08	0.05	0.04	0.04	0.04	0.04	0.05	0.05	0.05	0.05	0.05
	0.30	0.613	0.06	0.04	0.03	0.03	0.03	0.03	0.03	0.03	0.04	0.04	0.04
	0.35	0.638	0.05	0.04	0.03	0.03	0.03	0.03	0.03	0.03	0.03	0.03	0.03
	0.40	0.659	0.05	0.03	0.03	0.02	0.02	0.02	0.02	0.02	0.02	0.02	0.02
	0.45	0.677	0.04	0.02	0.02	0.02	0.02	0.02	0.02	0.02	0.02	0.02	0.02
	0.50	0.693	0.03	0.02	0.02	0.02	0.02	0.01	0.01	0.01	0.01	0.01	0.01
3 splitter vanes	0.05	0.467	0.11	0.10	0.12	0.13	0.14	0.16	0.18	0.19	0.21	0.22	0.23
	0.10	0.549	0.07	0.05	0.06	0.06	0.06	0.07	0.07	0.08	0.08	0.08	0.09
	0.15	0.601	0.05	0.04	0.04	0.04	0.04	0.04	0.04	0.04	0.04	0.05	0.05
	0.20	0.639	0.03	0.03	0.03	0.03	0.03	0.03	0.03	0.03	0.03	0.03	0.03
	0.25	0.669	0.03	0.02	0.02	0.02	0.02	0.02	0.02	0.02	0.02	0.02	0.02
	0.30	0.693	0.03	0.02	0.02	0.02	0.02	0.01	0.01	0.01	0.01	0.01	0.01
	0.35	0.714	0.02	0.02	0.01	0.01	0.01	0.01	0.01	0.01	0.01	0.01	0.01
	0.40	0.731	0.02	0.01	0.01	0.01	0.01	0.01	0.01	0.01	0.01	0.01	0.01
	0.45	0.746	0.01	0.01	0.01	0.01	0.01	0.01	0.01	0.01	0.01	0.01	0.01
	0.50	0.760	0.01	0.01	0.01	0.01	0.01	0.01	0.01	0.01	0.01	0.01	0.01

ıble 6-6 LOSS COEFFICIENTS, ELBOWS (Cont.)

ɜe the velocity pressure (V_p) of the upstream section. Fitting loss (TP) = C × V_p

Elbow, Rectangular, Mitered with Turning Vanes (2)

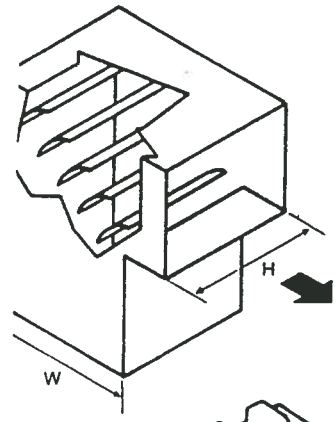

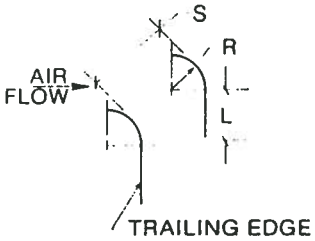

SINGLE THICKNESS VANES

*No.	Dimensions, inches			Coeff.
	R	S	L	C
1*	2.0	1.5	0.75	0.12
2	4.5	2.25	0	0.15
3	4.5	3.25	1.60	0.18

*Numbers are for reference only.

*When extension of trailing edge is not provided for this vane, losses are approximately unchanged for single elbows, but increase considerably for elbows in series.

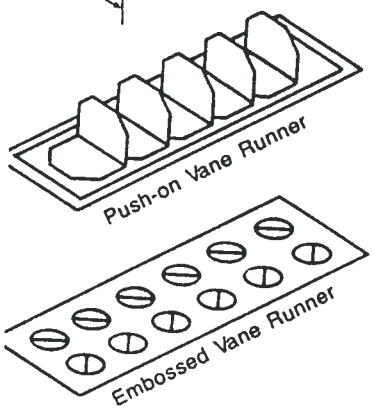

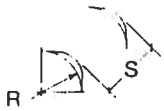

DOUBLE THICKNESS VANES
Coefficient C

*No.	Dimensions, in.		Velocity (V), fpm				Remarks
	R	S	1000	2000	3000	4000	
1	2.0	1.5	0.27	0.22	0.19	0.17	Embossed Vane Runner
2	2.0	1.5	0.33	0.29	0.26	0.23	Push-On Vane Runner
3	2.0	2.13	0.38	0.31	0.27	0.24	Embossed Vane Runner
4	4.5	3.25	0.26	0.21	0.18	0.16	Embossed Vane Runner

*Numbers are for reference only.

Elbows, 90°, Rectangular, Z-Shaped (15)

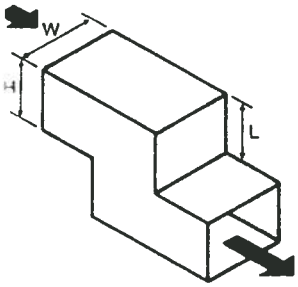

(NO VANES)

Coefficients for W/H = 1.0: (See Notes 4 and 5)

L/H	0	0.4	0.6	0.8	1.0	1.2	1.4	1.6	1.8	2.0
C	0	0.62	0.90	1.6	2.6	3.6	4.0	4.2	4.2	4.2
L/H	2.4	2.8	3.2	4.0	5.0	6.0	7.0	9.0	10.0	∞
C	3.7	3.3	3.2	3.1	2.9	2.8	2.7	2.6	2.5	2.3

Note 4: For W/H values other than 1.0 apply the following factor:

W/H	0.25	0.50	0.75	1.0	1.5	2.0	3.0	4.0	6.0	8.0
K	1.10	1.07	1.04	1.0	0.95	0.90	0.83	0.78	0.72	0.70

Note 5: Correction factor for Reynolds number — K_{Re}

R_e 10^{-4}	1	2	3	4	6	8	10	≥14
K_{Re}	1.40	1.26	1.19	1.14	1.09	1.06	1.04	1.0

$$D = \frac{2\,HW}{H + W}$$

For Standard Air:

$R_e = 8.56\ D\ V$

where:

D = hydraulic diameter, inches

V = duct velocity, fpm

Table 6-6 LOSS COEFFICIENTS, ELBOWS (Cont.)
Use the velocity pressure (V_p) of the upstream section. Fitting loss (TP) = C × V_p

J. Elbows, 90°, Rectangular in Different Planes (15)

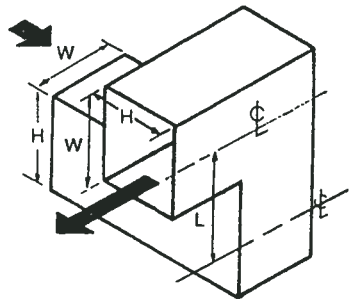

Coefficients for H/W = 1.0: (See Notes 4 & 5—Page 6.16)

L/W	0	0.4	0.6	0.8	1.0	1.2	1.4	1.6	1.8	2.0
C	1.2	2.4	2.9	3.3	3.4	3.4	3.4	3.3	3.2	3.1
L/W	2.4	2.8	3.2	4.0	5.0	6.0	7.0	9.0	10.0	∞
C	3.2	3.2	3.2	3.0	2.9	2.8	2.7	2.5	2.4	2.3

K. Elbows, 30°, Round, Offset (15)

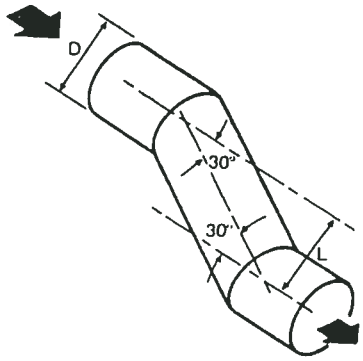

Coefficient C (See Note 5—Page 6.16

L/D	0	0.5	1.0	1.5	2.0	2.5	3.0
C	0	0.15	0.15	0.16	0.16	0.16	0.16

L. Elbows, 90°, Rectangular Wye or Tee Shape

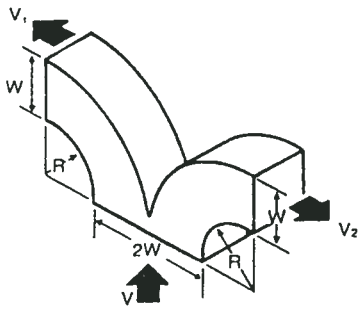

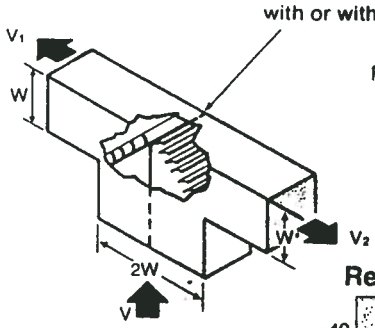

Flow can be diverging or converging

Use value of C for a similar elbow, provided $V = V_1 = V_2$ (Velocities)

Reynolds Number Correction Factor Chart

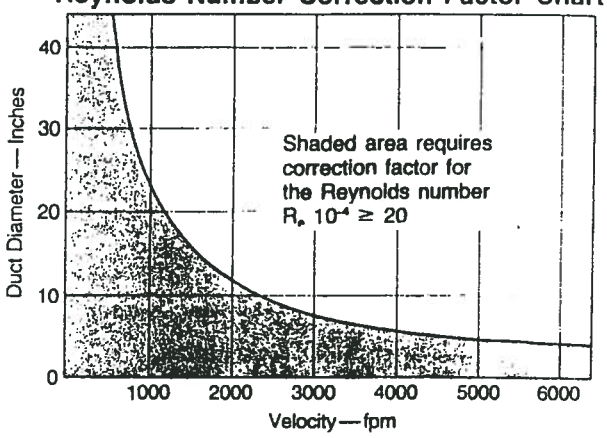

Table 6-7 LOSS COEFFICIENTS, TRANSITIONS (Diverging Flow)

Use the velocity pressure (V_p) of the upstream section. Fitting loss (TP) = C × V_p

A. Transition, Round, Conical (15)

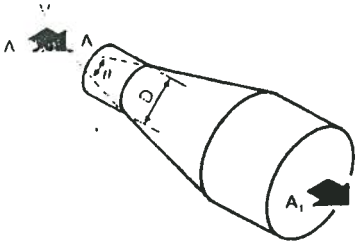

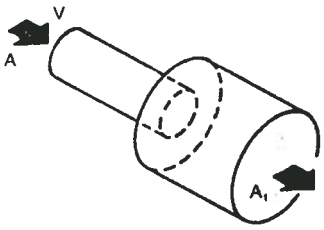

When: θ = 180°

R_e = 8.56 DV

where:

D = Upstream Diameter (inches)
V = Upstream Velocity (fpm)

Coefficient C (See Note 6)

R_e	A_1/A	θ 16°	20°	30°	45°	60°	90°	120°	180°
0.5 × 10^5	2	0.14	0.19	0.32	0.33	0.33	0.32	0.31	0.30
	4	0.23	0.30	0.46	0.61	0.68	0.64	0.63	0.62
	6	0.27	0.33	0.48	0.66	0.77	0.74	0.73	0.72
	10	0.29	0.38	0.59	0.76	0.80	0.83	0.84	0.83
	≥16	0.31	0.38	0.60	0.84	0.88	0.88	0.88	0.88
2 × 10^5	2	0.07	0.12	0.23	0.28	0.27	0.27	0.27	0.26
	4	0.15	0.18	0.36	0.55	0.59	0.59	0.58	0.57
	6	0.19	0.28	0.44	0.90	0.70	0.71	0.71	0.69
	10	0.20	0.24	0.43	0.76	0.80	0.81	0.81	0.81
	≥16	0.21	0.28	0.52	0.76	0.87	0.87	0.87	0.87
≥6 × 10^5	2	0.05	0.07	0.12	0.27	0.27	0.27	0.27	0.27
	4	0.17	0.24	0.38	0.51	0.56	0.58	0.58	0.57
	6	0.16	0.29	0.46	0.60	0.69	0.71	0.70	0.70
	10	0.21	0.33	0.52	0.60	0.76	0.83	0.84	0.83
	≥16	0.21	0.34	0.56	0.72	0.79	0.85	0.87	0.89

B. Transition, Rectangular, Pyramidal (15)

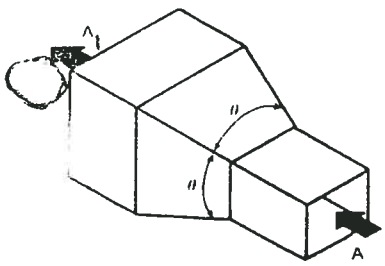

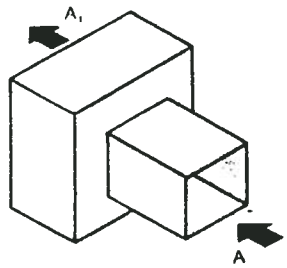

When θ = 180°

Coefficient C (See Note 6)

A_1/A	θ 16°	20°	30°	45°	60°	90°	120°	180°
2	0.18	0.22	0.25	0.29	0.31	0.32	0.33	0.30
4	0.36	0.43	0.50	0.56	0.61	0.63	0.63	0.63
6	0.42	0.47	0.58	0.68	0.72	0.76	0.76	0.75
≥10	0.42	0.49	0.59	0.70	0.80	0.87	0.85	0.86

Note 6: A = Area (Entering airstream), A_1 = Area (Leaving airstream)

Table 6-7 LOSS COEFFICIENTS, TRANSITIONS (Diverging Flow) (Cont.)

Use the velocity pressure (V_p) of the upstream section. Fitting loss (TP) = C × V_p

C. Transition, Round to Rectangular (15)

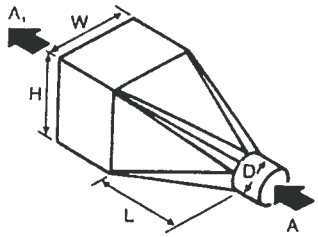

$$\tan\left(\frac{\theta}{2}\right) = \frac{1.13\sqrt{HW} - D}{2L}$$

For Figures C and D, compute θ using the equations and find the coefficient C from Table 6-7B, Transition, Rectangular, Pyramidal.

D. Transition, Rectangular to Round (15)

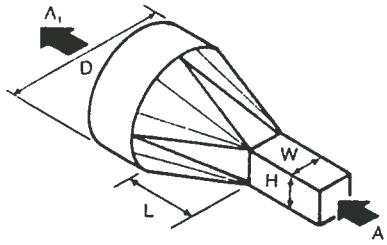

$$\tan\left(\frac{\theta}{2}\right) = \frac{D - 1.13\sqrt{HW}}{2L}$$

E. Transition, Rectangular, Sides Straight (15)

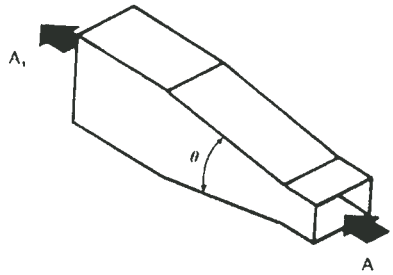

Coefficient C (See Note 6)

A_1/A	θ						
	14°	20°	30°	45°	60°	90°	180°
2	0.09	0.12	0.20	0.34	0.37	0.38	0.35
4	0.16	0.25	0.42	0.60	0.68	0.70	0.66
6	0.19	0.30	0.48	0.65	0.76	0.83	0.80

F. Transition, Symmetric at Fan With Duct Sides Straight (15)

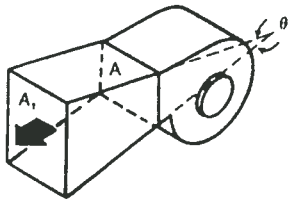

Coefficient C (See Note 6)

A_1/A	1.5	2.0	2.5	3.0	3.5	4.0
θ						
10°	0.05	0.07	0.09	0.10	0.11	0.11
15°	0.06	0.09	0.11	0.13	0.13	0.14
20°	0.07	0.10	0.13	0.15	0.16	0.16
25°	0.08	0.13	0.16	0.19	0.21	0.23
30°	0.16	0.24	0.29	0.32	0.34	0.35
35°	0.24	0.34	0.39	0.44	0.48	0.50

Note 6: A = Area (Entering airstream), A_1 = Area (Leaving airstream)

Table 6-7 LOSS COEFFICIENTS, TRANSITIONS (Diverging Flow) (Cont.)

Use the velocity pressure (V_p) of the upstream section. Fitting loss (TP) = C × V_p

G. Transition, Asymmetric at Fan With Duct Sides Straight, Top Level (15)

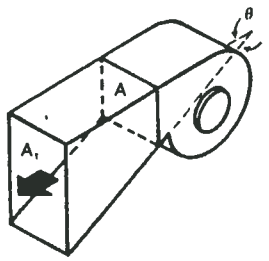

Coefficient C (See Note 6)

A_1/A	1.5	2.0	2.5	3.0	3.5	4.0
θ						
10°	0.08	0.09	0.10	0.10	0.11	0.11
15°	0.10	0.11	0.12	0.13	0.14	0.15
20°	0.12	0.14	0.15	0.16	0.17	0.18
25°	0.15	0.18	0.21	0.23	0.25	0.26
30°	0.18	0.25	0.30	0.33	0.35	0.35
35°	0.21	0.31	0.38	0.41	0.43	0.44

H. Transition, Asymmetric at Fan With Duct Sides Straight, Top 10° Down (15)

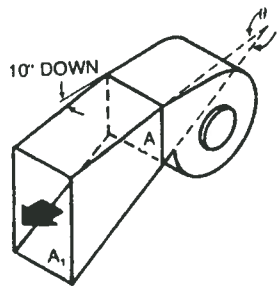

Coefficient C (See Note 6)

A_1/A	1.5	2.0	2.5	3.0	3.5	4.0
θ						
10°	0.11	0.13	0.14	0.14	0.14	0.14
15°	0.13	0.15	0.16	0.17	0.18	0.18
20°	0.19	0.22	0.24	0.26	0.28	0.30
25°	0.29	0.32	0.35	0.37	0.39	0.40
30°	0.36	0.42	0.46	0.49	0.51	0.51
35°	0.44	0.54	0.61	0.64	0.66	0.66

I. Transition, Asymmetric at Fan With Duct Sides Straight, Top 10° Up (15)

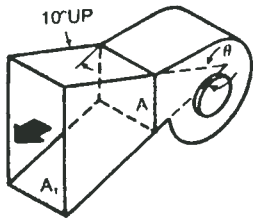

Coefficient C (See Note 6)

A_1/A	1.5	2.0	2.5	3.0	3.5	4.0
θ						
10°	0.05	0.08	0.11	0.13	0.13	0.14
15°	0.06	0.10	0.12	0.14	0.15	0.15
20°	0.07	0.11	0.14	0.15	0.16	0.16
25°	0.09	0.14	0.18	0.20	0.21	0.22
30°	0.13	0.18	0.23	0.26	0.28	0.29
35°	0.15	0.23	0.28	0.33	0.35	0.36

J. Transition, Pyramidal at Fan With Duct (15)

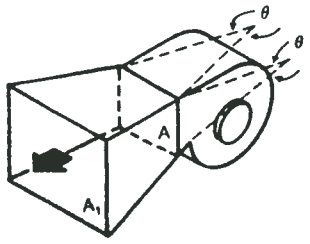

Coefficient C (See Note 6)

A_1/A	1.5	2.0	2.5	3.0	3.5	4.0
θ						
10°	0.10	0.18	0.21	0.23	0.24	0.25
15°	0.23	0.33	0.38	0.40	0.42	0.44
20°	0.31	0.43	0.48	0.53	0.56	0.58
25°	0.36	0.49	0.55	0.58	0.62	0.64
30°	0.42	0.53	0.59	0.64	0.67	0.69

Note 6: A = Area (Entering airstream), A_1 = Area (Leaving airstream)

Table 6-8 LOSS COEFFICIENTS, TRANSITIONS (Converging Flow)

Use the velocity pressure (V_p) of the downstream section. Fitting loss (TP) = C × V_p

A. Contraction, Round and Rectangular, Gradual to Abrupt (15)

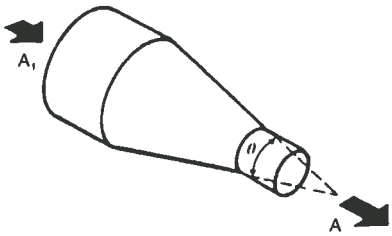

Coefficient C (See Note 7)

A_1/A	θ						
	10°	15°-40°	50°-60°	90°	120°	150°	180°
2	0.05	0.05	0.06	0.12	0.18	0.24	0.26
4	0.05	0.04	0.07	0.17	0.27	0.35	0.41
6	0.05	0.04	0.07	0.18	0.28	0.36	0.42
10	0.05	0.05	0.08	0.19	0.29	0.37	0.43

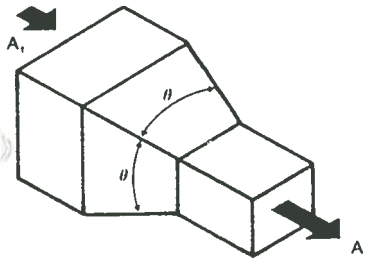

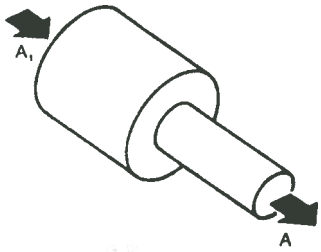

When θ = 180°

B. Contraction, Conical, Round and Rectangular (15)

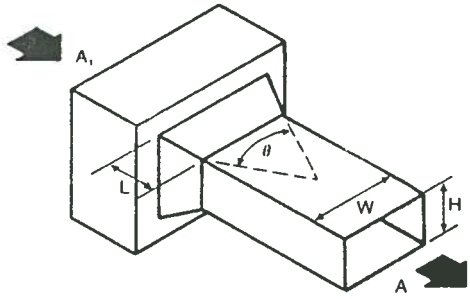

For Rectangular: $D = \frac{2\,HW}{H + W}$

Coefficient C = K C_o

θ is major angle for rectangular transition

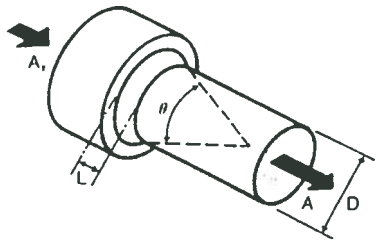

(See Note 7)

A/A_1	0	0.2	0.4	0.6	0.8	0.9	1.0
K	1.0	0.85	0.68	0.50	0.30	0.18	0

C_o

L/D	θ								
	0°	10°	20°	30°	40°	60°	100°	140°	180°
0.025	0.50	0.47	0.45	0.43	0.41	0.40	0.42	0.45	0.50
0.05	0.50	0.45	0.41	0.36	0.33	0.30	0.35	0.42	0.50
0.075	0.50	0.42	0.35	0.30	0.26	0.23	0.30	0.40	0.50
0.10	0.50	0.39	0.32	0.25	0.22	0.18	0.27	0.38	0.50
0.15	0.50	0.37	0.27	0.20	0.16	0.15	0.25	0.37	0.50
0.60	0.50	0.27	0.18	0.13	0.11	0.12	0.23	0.36	0.50

Note 7: A_1 = Area (Entering airstream), A = Area (Leaving airstream)

Table 6-8 LOSS COEFFICIENTS, TRANSITIONS (Converging Flow) (Cont.)

Use the velocity pressure (V_p) of the downstream section. Fitting loss (TP) = C × V_p

C. Contraction, Rectangular Slot to Round (15)

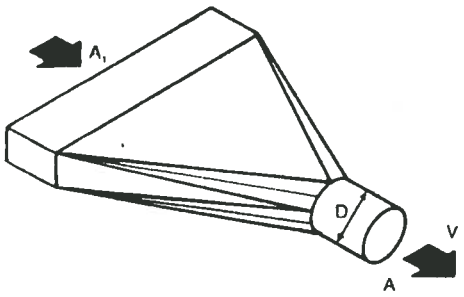

$A < A_1$

$R_e = 8.56\ DV$

Coefficient C (See Note 7)

$R_e\ 10^{-4}$	1	2	4	6	8	10	20	≥40
C	0.27	0.25	0.20	0.17	0.14	0.11	0.04	0

Table 6-9 LOSS COEFFICIENTS, CONVERGING JUNCTIONS (Tees, Wyes)

Use the velocity pressure (V_p) of the downstream section. Fitting loss (TP) = C × V_p

A. Converging Wye, Round (2)

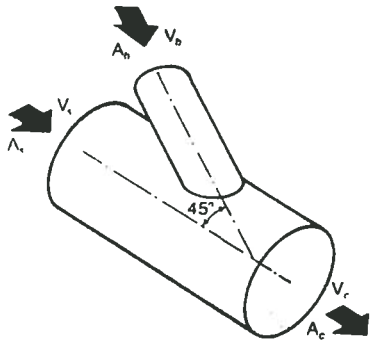

Branch, Coefficient C (See Note 8)

V_b/V_c	A_b/A_c 0.1	0.2	0.3	0.4	0.6	0.8	1.0
0.4	-.56	-.44	-.35	-.28	-.15	-.04	0.05
0.5	-.48	-.37	-.28	-.21	-.09	0.02	0.11
0.6	-.38	-.27	-.19	-.12	0	0.10	0.18
0.7	-.26	-.16	-.08	-.01	0.10	0.20	0.28
0.8	-.21	-.02	0.05	0.12	0.23	0.32	0.40
0.9	0.04	0.13	0.21	0.27	0.37	0.46	0.53
1.0	0.22	0.31	0.38	0.44	0.53	0.62	0.69
1.5	1.4	1.5	1.5	1.6	1.7	1.7	1.8
2.0	3.1	3.2	3.2	3.2	3.3	3.3	3.3
2.5	5.3	5.3	5.3	5.4	5.4	5.4	5.4
3.0	8.0	8.0	8.0	8.0	8.0	8.0	8.0

Main, Coefficient C

V_s/V_c	A_b/A_c 0.1	0.2	0.3	0.4	0.6	0.8	1.0
0.1	-8.6	-4.1	-2.5	-1.7	-.97	-.58	-.34
0.2	-6.7	-3.1	-1.9	-1.3	-.67	-.36	-.18
0.3	-5.0	-2.2	-1.3	-.88	-.42	-.19	-.05
0.4	-3.5	-1.5	-.88	-.55	-.21	-.05	0.05
0.5	-2.3	-.95	-.51	-.28	-.06	0.06	0.13
0.6	-1.3	-.50	-.22	-.09	0.05	0.12	0.17
0.7	-.63	-.18	-.03	0.04	0.12	0.16	0.18
0.8	-.18	0.01	0.07	0.10	0.13	0.15	0.17
0.9	0.03	0.07	0.08	0.09	0.10	0.11	0.13
1.0	-0.01	0	0	0.10	0.02	0.04	0.05

Note 7: A_1 = Area (Entering airstream), A = Area (Leaving airstream)

Note 8: A = Area (sq. in.), Q = Airflow (cfm), V = Velocity (fpm)

Table 6-9 LOSS COEFFICIENTS, CONVERGING JUNCTIONS (Cont.)

Use the velocity pressure (V_p) of the downstream section. Fitting loss (TP) = C × V_p

B. Converging Tee, 90°, Round (15)

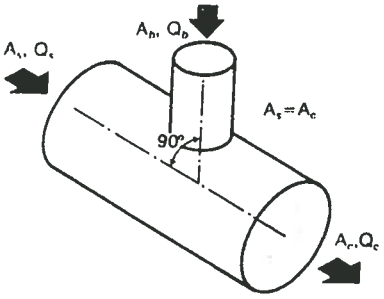

Branch, Coefficient C (See Note 8)

Q_b/Q_c	A_b/A_c 0.1	0.2	0.3	0.4	0.6	0.8	1.0
0.1	0.40	-.37	-.51	-.46	-.50	-.51	-.52
0.2	3.8	0.72	0.17	-.02	-.14	-.18	-.24
0.3	9.2	2.3	1.0	0.44	0.21	0.11	-.08
0.4	16	4.3	2.1	0.94	0.54	0.40	0.32
0.5	26	6.8	3.2	1.1	0.66	0.49	0.42
0.6	37	9.7	4.7	1.6	0.92	0.69	0.57
0.7	43	13	6.3	2.1	1.2	0.88	0.72
0.8	65	17	7.9	2.7	1.5	1.1	0.86
0.9	82	21	9.7	3.4	1.8	1.2	0.99
1.0	101	26	12	4.0	2.1	1.4	1.1

Main, Coefficient C (See Note 8)

Q_b/Q_c	0.1	0.2	0.3	0.4	0.5	0.6	0.7	0.8	0.9	1.0
C	0.16	0.27	0.38	0.46	0.53	0.57	0.59	0.60	0.59	0.55

C. Converging Tee, Round Branch to Rectangular Main

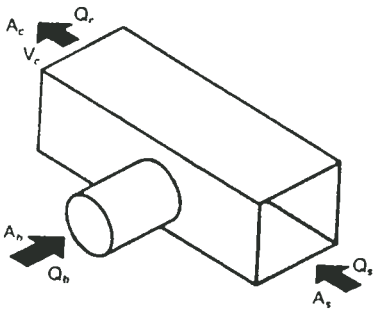

Branch, Coefficient C (See Note 8)

V_c	Q_b/Q_c 0.1	0.2	0.3	0.4	0.5	0.6	0.7	0.8	0.9	1.0
< 1200 fpm	-.63	-.55	0.13	0.23	0.78	1.30	1.93	3.10	4.88	5.60
> 1200 fpm	-.49	-.21	0.23	0.60	1.27	2.06	2.75	3.70	4.93	5.95

For Main Loss Coefficient (C) see Fitting 6-9B

When:

A_b/A_s	A_s/A_c	A_b/A_c
0.5	1.0	0.5

Converging Tee, Rectangular Main and Branch

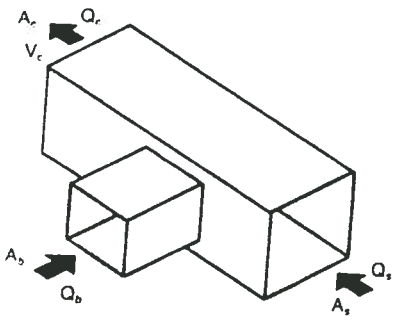

Branch, Coefficient (See Note 8)

V_c	Q_b/Q_c 0.1	0.2	0.3	0.4	0.5	0.6	0.7	0.8	0.9	1.0
< 1200 fpm	-.75	-.53	-.03	0.33	1.03	1.10	2.15	2.93	4.18	4.78
> 1200 fpm	-.69	-.21	0.23	0.67	1.17	1.66	2.67	3.36	3.93	5.13

For Main Loss Coefficient (C) see Fitting 6-9B

When:

A_b/A_s	A_s/A_c	A_b/A_c
0.5	1.0	0.5

Note 8: A = Area (sq. in.), Q = Airflow (cfm), V = Velocity (fpm)

Table 6-9 LOSS COEFFICIENTS, CONVERGING JUNCTIONS (Cont.)

Use the velocity pressure (V_p) of the downstream section. Fitting loss (TP) = C × V_p

E. Converging Wye, Conical, Round (2)

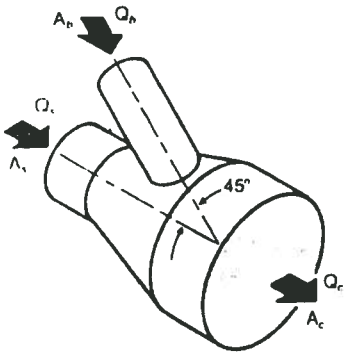

Branch, Coefficient C (See Note 8)

A_s/A_c	A_b/A_c	Q_b/Q_s 0.2	0.4	0.6	0.8	1.0	1.2	1.4	1.6	1.8	2.0
0.3	0.2	-2.4	-.01	2.0	3.8	5.3	6.6	7.8	8.9	9.8	11
	0.3	-2.8	-1.2	0.12	1.1	1.9	2.6	3.2	3.7	4.2	4.6
0.4	0.2	-1.2	0.93	2.8	4.5	5.9	7.2	8.4	9.5	10	11
	0.3	-1.6	-.27	0.81	1.7	2.4	3.0	3.6	4.1	4.5	4.9
	0.4	-1.8	-.72	0.07	0.66	1.1	1.5	1.8	2.1	2.3	2.5
0.5	0.2	-.46	1.5	3.3	4.9	6.4	7.7	8.8	9.9	11	12
	0.3	-.94	0.25	1.2	2.0	2.7	3.3	3.8	4.2	4.7	5.0
	0.4	-1.1	-.24	0.42	0.92	1.3	1.6	1.9	2.1	2.3	2.5
	0.5	-1.2	-.38	0.18	0.58	0.88	1.1	1.3	1.5	1.6	1.7
0.6	0.2	-.55	1.3	3.1	4.7	6.1	7.4	8.6	9.6	11	12
	0.3	-1.1	0	0.88	1.6	2.3	2.8	3.3	3.7	4.1	4.5
	0.4	-1.2	-.48	0.10	0.54	0.89	1.2	1.4	1.6	1.8	2.0
	0.5	-1.3	-.62	-.14	0.21	0.47	0.68	0.85	0.99	1.1	1.2
	0.6	-1.3	-.69	-.26	0.04	0.26	0.42	0.57	0.66	0.75	0.82
0.8	0.2	0.06	1.8	3.5	5.1	6.5	7.8	8.9	10	11	12
	0.3	-.52	0.35	1.1	1.7	2.3	2.8	3.2	3.6	3.9	4.2
	0.4	-.67	-.05	0.43	0.80	1.1	1.4	1.6	1.8	1.9	2.1
	0.5	-.73	-.19	0.18	0.46	0.68	0.85	0.99	1.1	1.2	1.3
	0.6	-.75	-.27	0.05	0.28	0.45	0.58	0.68	0.76	0.83	0.88
	0.7	-.77	-.31	-.02	0.18	0.32	0.43	0.50	0.56	0.61	0.65
	0.8	-.78	-.34	-.07	0.12	0.24	0.33	0.39	0.44	0.47	0.50
1.0	0.2	—	2.1	3.7	5.2	6.6	7.8	9.0	11	11	12
	0.3	—	.54	1.2	1.8	2.3	2.7	3.1	3.7	3.7	4.0
	0.4	—	.21	0.62	0.96	1.2	1.5	1.7	2.0	2.0	2.1
	0.5	—	.05	0.37	0.60	0.79	0.93	1.1	1.2	1.2	1.3
	0.6	—	-.02	0.23	0.42	0.55	0.66	0.73	0.80	0.85	0.89
	0.8	—	-.10	0.11	0.24	0.33	0.39	0.43	0.46	0.47	0.48
	1.0	—	-.14	0.05	0.16	0.23	0.27	0.29	0.30	0.30	0.29

F. Converging Tee, 45° Entry Branch to Rectangular Main

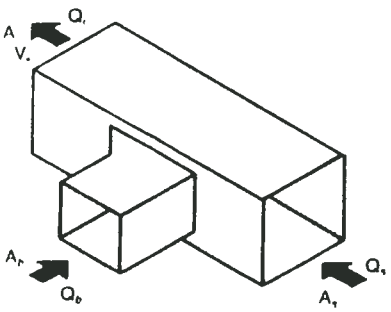

When:

A_b/A_s	A_s/A_c	A_b/A_c
0.5	1.0	0.5

Branch, Coefficient C (See Note 8)

V_c	Q_b/Q_c 0.1	0.2	0.3	0.4	0.5	0.6	0.7	0.8	0.9	1.0
< 1200 fpm	-.83	-.68	-.30	0.28	0.55	1.03	1.50	1.93	2.50	3.03
> 1200 fpm	-.72	-.52	-.23	0.34	0.76	1.14	1.83	2.01	2.90	3.63

For Main Loss Coefficient (C) see Fitting 6-9B (Page 6.23).

Note 8: A = Area (sq. in.), Q = Airflow (cfm), V = Velocity (fpm)

Table 6-9 LOSS COEFFICIENTS, CONVERGING JUNCTIONS (Cont.)

Use the velocity pressure (V_p) of the downstream section. Fitting loss (TP) = C × V_p

Main, Coefficient C (See Note 8)

A_s/A_c	A_b/A_c	Q_b/Q_s 0.2	0.4	0.6	0.8	1.0	1.2	1.4	1.6	1.8	2.0
0.3	0.2	5.3	-.01	2.0	1.1	0.34	-.20	-.61	-.93	-1.2	-1.4
	0.3	5.4	3.7	2.5	1.6	1.0	0.53	0.16	-.14	-.38	-.58
0.4	0.2	1.9	1.1	0.46	-.07	-.49	-.83	-1.1	-1.3	-1.5	-1.7
	0.3	2.0	1.4	0.81	0.42	0.08	-.20	-.43	-.62	-.78	-.92
	0.4	2.0	1.5	1.0	0.68	0.39	0.16	-.04	-.21	-.35	-.47
0.5	0.2	0.77	0.34	-.09	-.48	-.81	-1.1	1.3	-1.5	-1.7	-1.8
	0.3	0.85	0.56	0.25	-.03	-.27	-.48	-.67	-.82	-.96	-1.1
	0.4	0.88	0.66	0.43	0.21	0.02	-.15	-.30	-.42	-.54	-.64
	0.5	0.91	0.73	0.54	0.36	0.21	0.06	-.06	-.17	-.26	-.35
0.6	0.2	0.30	0	-.34	-.67	-.96	-1.2	-1.4	-1.6	-1.8	-1.9
	0.3	0.37	0.21	-.02	-.24	-.44	-.63	-.79	-.93	-1.1	-1.2
	0.4	0.40	0.31	0.16	-.01	-.16	-.30	-.43	-.54	-.64	-.73
	0.5	0.43	0.37	0.26	0.14	0.02	-.09	-.20	-.29	-.37	-.45
	0.6	0.44	0.41	0.33	0.24	0.14	0.05	-.03	-.11	-.18	-.25
0.8	0.2	-.06	-.27	-.57	-.86	-1.1	-1.4	-1.6	-1.7	-1.9	-2.0
	0.3	0	-.08	-.25	-.43	-.62	-.78	-.93	-1.1	-1.2	-1.3
	0.4	0.04	0.02	-.08	-.21	-.34	-.46	-.57	-.67	-.77	-.85
	0.5	0.06	0.08	0.02	-.06	-.16	-.25	-.34	-.42	-.50	-.57
	0.6	0.07	0.12	0.09	0.03	-.04	-.11	-.18	-.25	-.31	-.37
	0.7	0.08	0.15	0.14	0.10	0.05	-.01	-.07	-.12	-.17	-.22
	0.8	0.09	0.17	0.18	0.16	0.11	0.07	0.02	-.02	-.07	-.11
1.0	0.2	—	-.39	-.67	-.96	-1.2	-1.5	-1.6	-1.8	-2.0	-2.1
	0.3	—	-.19	-.35	-.54	-.71	-.87	-1.0	-1.2	-1.3	-1.4
	0.4	—	-.10	-.19	-.31	-.43	-.55	-.66	-.77	-.86	-.94
	0.5	—	-.04	-.09	-.17	-.26	-.35	-.44	-.52	-.59	-.66
	0.6	—	0	-.02	-.07	-.14	-.21	-.28	-.34	-.40	-.46
	0.8	—	0.06	0.07	0.05	0.02	-.03	-.07	-.12	-.16	-.20
	1.0	—	0.09	0.13	0.13	0.11	0.08	0.06	0.03	-.01	-.03

G. Symmetrical Wye, Dovetail, Rectangular (15)

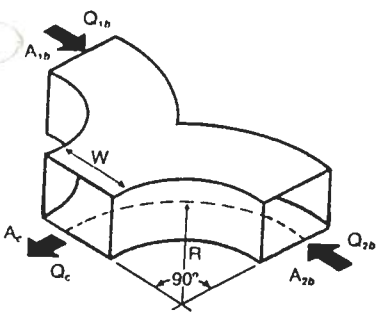

$\frac{R}{W} = 1.5$ $\frac{Q_{1b}}{Q_c} = \frac{Q_{2b}}{Q_c} = 0.5$

Coefficient C (See Note 8)

A_{1b}/A_c or A_{2b}/A_c	0.50	1.0
C	0.23	0.07

0.8

Note 8: A = Area (sq. in.), Q = Airflow (cfm), V = Velocity (fpm)

Table 6-9 LOSS COEFFICIENTS, CONVERGING JUNCTIONS (Cont.)

Use the velocity pressure (V_p) of the downstream section. Fitting loss (TP) = C × V_p

H. Converging Wye, Rectangular (15)

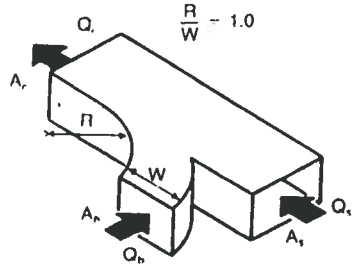

Branch, Coefficient (See Note 8)

A_b/A_s	A_b/A_c	Q_b/Q_c 0.1	0.2	0.3	0.4	0.5	0.6	0.7	0.8	0.9
0.25	0.25	-.50	0	0.50	1.2	2.2	3.7	5.8	8.4	11
0.33	0.25	-1.2	-.40	0.40	1.6	3.0	4.8	6.8	8.9	11
0.5	0.5	-.50	-.20	0	0.25	0.45	0.70	1.0	1.5	2.0
0.67	0.5	-1.0	-.60	-.20	0.10	0.30	0.60	1.0	1.5	2.0
1.0	0.5	-2.2	-1.5	-.95	-.50	0	0.40	0.80	1.3	1.9
1.0	1.0	-.60	-.30	-.10	-.04	0.13	0.21	0.29	0.36	0.42
1.33	1.0	-1.2	-.80	-.40	-.20	0	0.16	0.24	0.32	0.38
2.0	1.0	-2.1	-1.4	-.90	-.50	-.20	0	0.20	0.25	0.30

Main, Coefficient C (See Note 8)

A_s/A_c	A_b/A_c	Q_b/Q_c 0.1	0.2	0.3	0.4	0.5	0.6	0.7	0.8	0.9
0.75	0.25	0.30	0.30	0.20	-.10	- .45	-.92	-1.5	-.2.0	-2.6
1.0	0.5	0.17	0.16	0.10	0	-0.08	-.18	-.27	-.37	-.46
0.75	0.5	0.27	0.35	0.32	0.25	0.12	-.03	-.23	-.42	-.58
0.5	0.5	1.2	1.1	0.90	0.65	0.35	0	-.40	-.80	-1.3
1.0	1.0	0.18	0.24	0.27	0.26	0.23	0.18	0.10	0	-.12
0.75	1.0	0.75	0.36	0.38	0.35	0.27	0.18	0.05	-.08	-.22
0.5	1.0	0.80	0.87	0.80	0.68	0.55	0.40	0.25	0.08	-.10

I. Wye, Rectangular and Round (15)

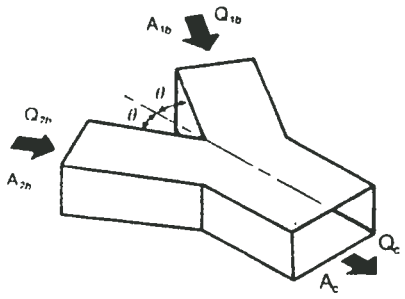

Coefficient C (See Note 8)

θ	Q_{1b}/Q_c or Q_{2b}/Q_c 0	0.10	0.20	0.30	0.40	0.50	0.60	0.70	0.80	0.90	1.0
15°	-2.6	-1.9	-1.3	-.77	-.30	0.10	0.41	0.67	0.85	0.97	1.0
30°	-2.1	-1.5	-1.0	-.53	-.10	0.28	0.69	0.91	1.1	1.4	1.6
45°	-1.3	-.93	-.55	-.16	0.20	0.56	0.92	1.26	1.6	2.0	2.3

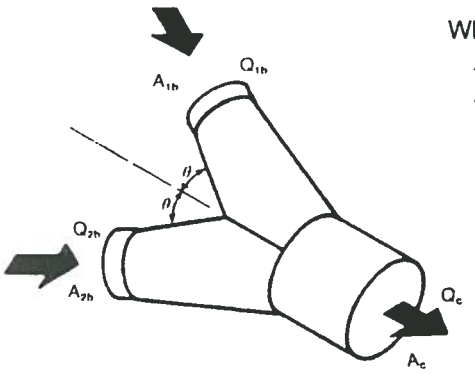

When:

$A_{1b} = A_{2b}$

$A_c = A_{1b} + A_{2b}$

Note 8: A = Area (sq. in.), Q = Airflow (cfm), V = Velocity (fpm)

Table 6-10 LOSS COEFFICIENTS, DIVERGING JUNCTIONS (Tees, Wyes)

Use the velocity pressure (V_p) of the upstream section. Fitting loss (TP) = C × V_p

A. Tee or Wye, 30° to 90°, Round (15)

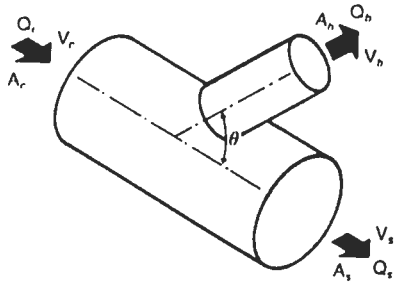

Main, Coefficient C (See Note 8)

V_s/V_c	0	0.1	0.2	0.3	0.4	0.5	0.6	0.8	1.0
C	0.35	0.28	0.22	0.17	0.13	0.09	0.06	0.02	0

Wye θ = 30°: Branch, Coefficient C (See note 8)

A_b/A_c	Q_b/Q_c								
	0.1	0.2	0.3	0.4	0.5	0.6	0.7	0.8	0.9
0.8	0.75	0.55	0.40	0.28	0.21	0.16	0.15	0.16	0.19
0.7	0.72	0.51	0.36	0.25	0.18	0.15	0.16	0.20	0.26
0.6	0.69	0.46	0.31	0.21	0.17	0.16	0.20	0.28	0.39
0.5	0.65	0.41	0.26	0.19	0.18	0.22	0.32	0.47	0.67
0.4	0.59	0.33	0.21	0.20	0.27	0.40	0.62	0.92	1.3
0.3	0.55	0.28	0.24	0.38	0.76	1.3	2.0	—	—
0.2	0.40	0.26	0.58	1.3	2.5	—	—	—	—
0.1	0.28	1.5	—	—	—	—	—	—	—

Wye θ = 45°: Branch, Coefficient C (See note 8)

A_b/A_c	Q_bQ_c								
	0.1	0.2	0.3	0.4	0.5	0.6	0.7	0.8	0.9
0.8	0.78	0.62	0.49	0.40	0.34	0.31	0.32	0.35	0.40
0.7	0.77	0.59	0.47	0.38	0.34	0.32	0.35	0.41	0.50
0.6	0.74	0.56	0.44	0.37	0.35	0.36	0.43	0.54	0.68
0.5	0.71	0.52	0.41	0.38	0.40	0.45	0.59	0.78	1.0
0.4	0.66	0.47	0.40	0.43	0.54	0.69	0.95	1.3	1.7
0.3	0.66	0.48	0.52	0.73	1.2	1.8	2.7	—	—
0.2	0.56	0.56	1.0	1.8	—	—	—	—	—
0.1	0.60	2.1	—	—	—	—	—	—	—

Wye θ = 60°: Branch, Coefficient C (See note 8)

A_b/A_c	Q_b/Q_c								
	0.1	0.2	0.3	0.4	0.5	0.6	0.7	0.8	0.9
0.8	0.83	0.71	0.62	0.56	0.52	0.50	0.53	0.60	0.68
0.7	0.82	0.69	0.61	0.56	0.54	0.54	0.60	0.70	0.82
0.6	0.81	0.68	0.60	0.58	0.58	0.61	0.72	0.87	1.1
0.5	0.79	0.66	0.61	0.62	0.68	0.76	0.94	1.2	1.5
0.4	0.76	0.65	0.65	0.74	0.89	1.1	1.4	1.8	2.3
0.3	0.80	0.75	0.89	1.2	1.8	2.6	3.5	—	—
0.2	0.77	0.96	1.6	2.5	—	—	—	—	—
0.1	1.0	2.9	—	—	—	—	—	—	—

Tee θ = 90°: Branch, Coefficient C (See note 8)

A_b/A_c	Q_b/Q_c								
	0.1	0.2	0.3	0.4	0.5	0.6	0.7	0.8	0.9
0.8	0.95	0.92	0.92	0.93	0.94	0.95	1.1	1.2	1.4
0.7	0.95	0.94	0.95	0.98	1.0	1.1	1.2	1.4	1.6
0.6	0.96	0.97	1.0	1.1	1.1	1.2	1.4	1.7	2.0
0.5	0.97	1.0	1.1	1.2	1.4	1.5	1.8	2.1	2.5
0.4	0.99	1.1	1.3	1.5	1.7	2.0	2.4	—	—
0.3	1.1	1.4	1.8	2.3	—	—	—	—	—
0.2	1.3	1.9	2.9	—	—	—	—	—	—
0.1	2.1	—	—	—	—	—	—	—	—

Note 8: A = Area (sq. in.), Q = Airflow (cfm), V = Velocity (fpm)

Table 6-10 LOSS COEFFICIENTS, DIVERGING JUNCTIONS (Cont.)

Use the velocity pressure (V_p) of the upstream section. Fitting loss (TP) = C × V_p

B. 90° Conical Tee, Round (2)

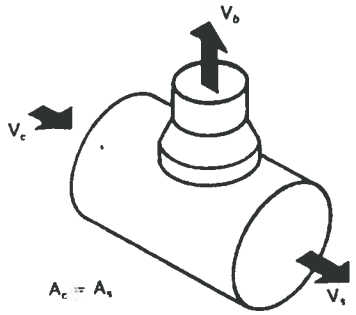

Branch, Coefficient C (See Note 8)

V_b/V_c	0	0.2	0.4	0.6	0.8	1.0	1.2	1.4	1.6	1.8	2.0
C	1.0	0.85	0.74	0.62	0.52	0.42	0.36	0.32	0.32	0.37	0.52

For Main Loss Coefficient (C) see Fitting 6-10A (Page 6.27).

C. 45° Conical Wye, Round (2)

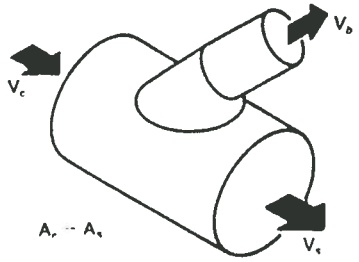

Branch, Coefficient C (See Note 8)

V_b/V_c	0	0.2	0.4	0.6	0.8	1.0	1.2	1.4	1.6	1.8	2.0
C	1.0	0.84	0.61	0.41	0.27	0.17	0.12	0.12	0.14	0.18	0.27

For Main Loss Coefficient (C) see Fitting 6-10A (Page 6.27).

D. 90° Tee, Round, Rolled 45° with 45° Elbow, Branch 90° to Main (2)

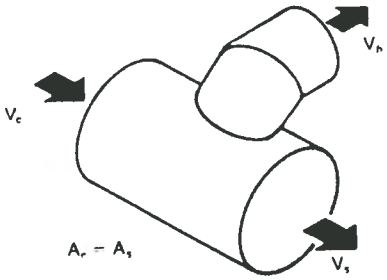

Branch, Coefficient C (See Note 8)

V_b/V_c	0	0.2	0.4	0.6	0.8	1.0	1.2	1.4	1.6	1.8	2.0
C	1.0	1.32	1.51	1.60	1.65	1.74	1.87	2.0	2.2	2.5	2.7

For Main Loss Coefficient (C) see Fitting 6-10A (Page 6.27).

E. 90° Tee, Round, with 90° Elbow, Branch 90° to Main (2)

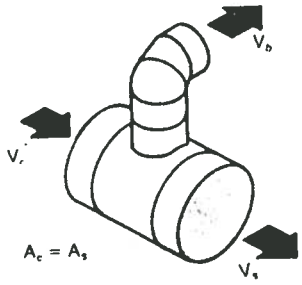

Branch, Coefficient C (See Note 8)

V_b/V_c	0	0.2	0.4	0.6	0.8	1.0	1.2	1.4	1.6	1.8	2.0
C	1.0	1.03	1.08	1.18	1.33	1.56	1.86	2.2	2.6	3.0	3.4

For Main Loss Coefficient (C) see Fitting 6-10A (Page 6.27).

Note 8: A = Area (sq. in.), Q = Airflow (cfm), V = Velocity (fpm)

Table 6-10 LOSS COEFFICIENTS, DIVERGING JUNCTIONS (Cont.)

Use the velocity pressure (V_p) of the upstream section. Fitting loss (TP) = C × V_p

F. 90° Tee, Round, Rolled 45° with 60° Elbow, Branch 45° to Main(2)

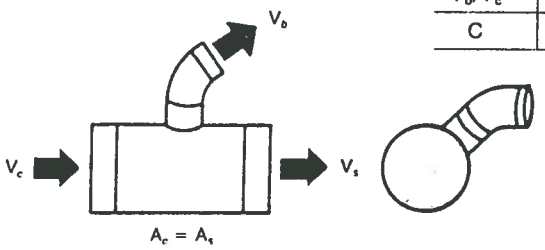

Branch, Coefficient C (See Note 8)

V_b/V_c	0	0.2	0.4	0.6	0.8	1.0	1.2	1.4	1.6	1.8	2.0
C	1.0	1.06	1.15	1.29	1.45	1.65	1.89	2.2	2.5	2.9	3.3

For Main Loss Coefficient (C) see Fitting 6-10A (Page 6.27).

G. 90° Conical Tee, Round, Rolled 45° with 45° Elbow, Branch 90° to Main(2)

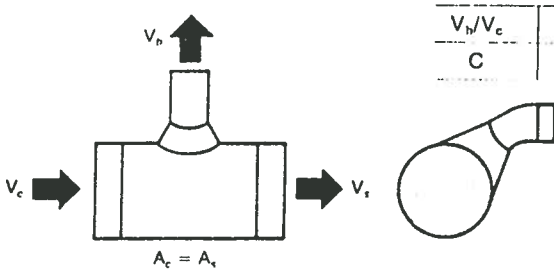

Branch, Coefficient C (See Note 8)

V_b/V_c	0	0.2	0.4	0.6	0.8	1.0	1.2	1.4	1.6	1.8	2.0
C	1.0	0.94	0.88	0.84	0.80	0.82	0.84	0.87	0.90	0.95	1.02

For Main Loss Coefficient (C) see Fitting 6-10A (Page 6.27).

H. 90° Conical Tee, Round, Rolled 45° with 60° Elbow, Branch 45° to Main(2)

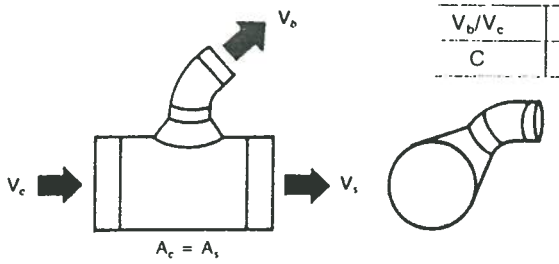

Branch, Coefficient C (See Note 8)

V_b/V_c	0	0.2	0.4	0.6	0.8	1.0	1.2	1.4	1.6	1.8	2.0
C	1.0	0.95	0.90	0.86	0.81	0.79	0.79	0.81	0.86	0.96	1.10

For Main Loss Coefficient (C) see Fitting 6-10A (Page 6.27).

I. 45° Wye, Round, Rolled 45° with 60° Elbow, Branch 90° to Main(2)

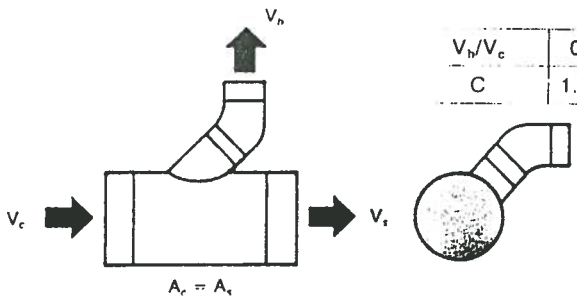

Branch, Coefficient C (See Note 8)

V_b/V_c	0	0.2	0.4	0.6	0.8	1.0	1.2	1.4	1.6	1.8	2.0
C	1.0	0.88	0.77	0.68	0.65	0.69	0.73	0.88	1.14	1.54	2.2

For Main Loss Coefficient (C) see Fitting 6-10A (Page 6.27).

Note 8: A = Area (sq. in.), Q = Airflow (cfm), V = Velocity (fpm)

Table 6-10 LOSS COEFFICIENTS, DIVERGING JUNCTIONS (Cont.)

Use the velocity pressure (V_p) of the upstream section. Fitting loss (TP) = C × V_p

J. 45" Conical Wye, Round, Rolled 45° with 60" Elbow, Branch 90° to Main(2)

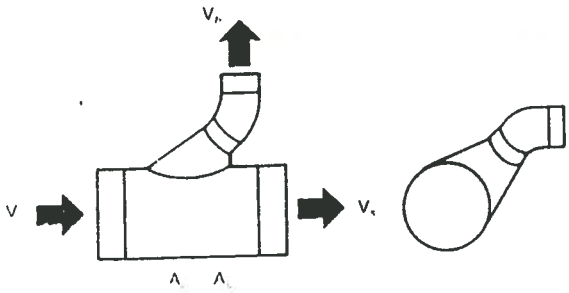

Branch, Coefficient C (See Note 8)

V_b/V_c	0	0.2	0.4	0.6	0.8	1.0	1.2	1.4	1.6	1.8	2.0
C	1.0	0.82	0.63	0.52	0.45	0.42	0.41	0.40	0.41	0.45	0.56

For Main Loss Coefficient (C) see Fitting 6-10A (Page 6.27).

K. 45" Wye, Round, Rolled 45° with 30" Elbow, Branch 45° to Main(2)

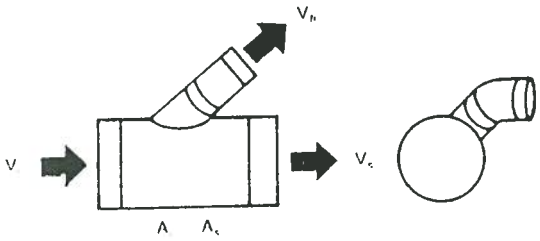

Branch, Coefficient C (See Note 8)

V_b/V_c	0	0.2	0.4	0.6	0.8	1.0	1.2	1.4	1.6	1.8	2.0
C	1.0	0.84	0.72	0.62	0.54	0.50	0.56	0.71	0.92	1.22	1.66

For Main Loss Coefficient (C) see Fitting 6-10A (Page 6.27).

L. 45" Conical Wye, Round, Rolled 45° with 30" Elbow, Branch 45° to Main(2)

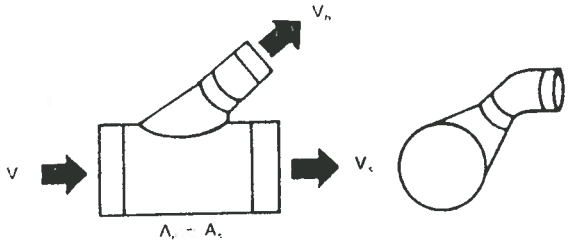

Branch, Coefficient C (See Note 8)

V_b/V_c	0	0.2	0.4	0.6	0.8	1.0	1.2	1.4	1.6	1.8	2.0
C	1.0	0.93	0.71	0.55	0.44	0.42	0.42	0.44	0.47	0.54	0.62

For Main Loss Coefficient (C) see Fitting 6-10A (Page 6.27).

Note 8: A = Area (sq. in.), Q = Airflow (cfm), V = Velocity (fpm)

Table 6-10 LOSS COEFFICIENTS, DIVERGING JUNCTIONS (Cont.)

Use the velocity pressure (V_p) of the upstream section. Fitting loss (TP) = C × V_p

M. 45° Wye, Conical Main and Branch with 45° Elbow, Branch 90° to Main (15)

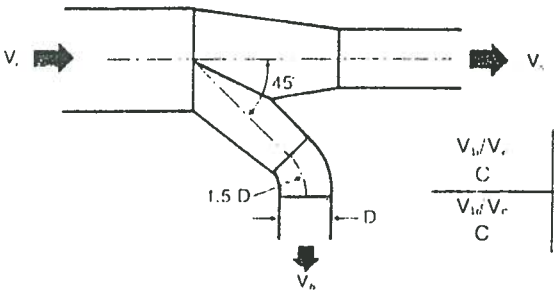

Branch, Coefficient C (See Note 8)

V_b/V_c	0.2	0.4	0.6	0.7	0.8	0.9	1.0	1.1	1.2
C	0.76	0.60	0.52	0.50	0.51	0.52	0.56	0.61	0.68
V_b/V_c	1.4	1.6	1.8	2.0	2.2	2.4	2.6	2.8	3.0
C	0.86	1.1	1.4	1.8	2.2	2.6	3.1	3.7	4.2

Main, Coefficient C (See Note 8)

V_s/V_c	0.2	0.4	0.6	0.8	1.0	1.2	1.4	1.6	1.8	2.0
C	0.14	0.06	0.05	0.09	0.18	0.30	0.46	0.64	0.84	1.0

N. Tee, 45° Entry, Rectangular Main and Branch

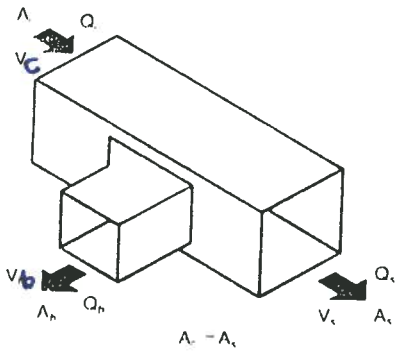

Branch, Coefficient C (See Note 8)

V_b/V_c	Q_b/Q_c								
	0.1	0.2	0.3	0.4	0.5	0.6	0.7	0.8	0.9
0.2	0.91								
0.4	0.81	0.79							
0.6	0.77	0.72	0.70						
0.8	0.78	0.73	0.69	0.66					
1.0	0.78	0.98	0.85	0.79	0.74				
1.2	0.90	1.11	1.16	1.23	1.03	0.86			
1.4	1.19	1.22	1.26	1.29	1.54	1.25	0.92		
1.6	1.35	1.42	1.55	1.59	1.63	1.50	1.31	1.09	
1.8	1.44	1.50	1.75	1.74	1.72	2.24	1.63	1.40	1.17

For Main Loss Coefficient (C) see Fitting 6-10A (Page 6.27).

Tee, 45° Entry, Rectangular Main and Branch with Damper

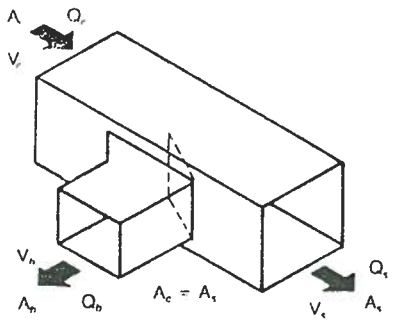

Branch, Coefficient C (See Note 8)

V_b/V_c	Q_b/Q_c								
	0.1	0.2	0.3	0.4	0.5	0.6	0.7	0.8	0.9
0.2	0.61								
0.4	0.46	0.61							
0.6	0.43	0.50	0.54						
0.8	0.39	0.43	0.62	0.53					
1.0	0.34	0.57	0.77	0.73	0.68				
1.2	0.37	0.64	0.85	0.98	1.07	0.83			
1.4	0.57	0.71	1.04	1.16	1.54	1.36	1.18		
1.6	0.89	1.08	1.28	1.30	1.69	2.09	1.81	1.47	
1.8	1.33	1.34	2.04	1.78	1.90	2.40	2.77	2.23	1.92

For Main Loss Coefficient (C) see Fitting 6-10S (Page 6.32).

Note 8: A = Area (sq. in.), Q = Airflow (cfm), V = Velocity (fpm)

Table 6-10 LOSS COEFFICIENTS, DIVERGING JUNCTIONS (Cont.)

Use the velocity pressure (V_p) of the upstream section. Fitting loss (TP) = C × V_p

Q. Tee, Rectangular Main and Branch

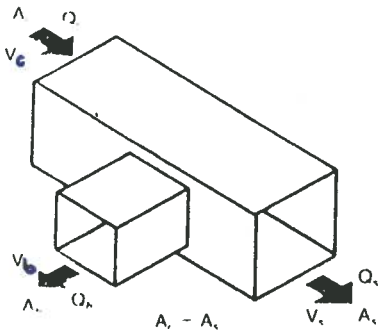

Branch, Coefficient C (See Note 8)

V_b/V_c	Q_b/Q_c 0.1	0.2	0.3	0.4	0.5	0.6	0.7	0.8	0.9
0.2	1.03								
0.4	1.04	1.01							
0.6	1.11	1.03	1.05						
0.8	1.16	1.21	1.17	1.12					
1.0	1.38	1.40	1.30	1.36	1.27				
1.2	1.52	1.61	1.68	1.91	1.47	1.66			
1.4	1.79	2.01	1.90	2.31	2.28	2.20	1.95		
1.6	2.07	2.28	2.13	2.71	2.99	2.81	2.09	2.20	
1.8	2.32	2.54	2.64	3.09	3.72	3.48	2.21	2.29	2.57

For Main Loss Coefficient (C) see Fitting 6-10A (Page 6.27).

R. Tee, Rectangular Main and Branch with Damper

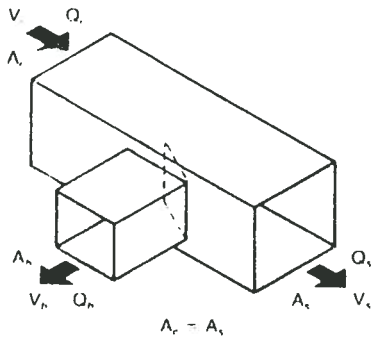

Branch, Coefficient C (See Note 8)

V_b/V_c	Q_b/Q_c 0.1	0.2	0.3	0.4	0.5	0.6	0.7	0.8	0.9
0.2	0.58								
0.4	0.67	0.64							
0.6	0.78	0.76	0.75						
0.8	0.88	0.98	0.81	1.01					
1.0	1.12	1.05	1.08	1.18	1.29				
1.2	1.49	1.48	1.40	1.51	1.70	1.91			
1.4	2.10	2.21	2.25	2.29	2.32	2.48	2.53		
1.6	2.72	3.30	2.84	3.09	3.30	3.19	3.29	3.16	
1.8	3.42	4.58	3.65	3.92	4.20	4.15	4.14	4.10	4.05

For Main Loss Coefficient (C) see Fitting 6-10S

S. Tee, Rectangular Main and Branch with Extractor

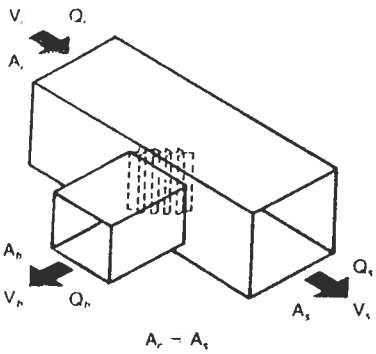

Branch, Coefficient C (See Note 8)

V_b/V_c	Q_b/Q_c 0.1	0.2	0.3	0.4	0.5	0.6	0.7	0.8	0.9
0.2	0.60								
0.4	0.62	0.69							
0.6	0.74	0.80	0.82						
0.8	0.99	1.10	0.95	0.90					
1.0	1.48	1.12	1.41	1.24	1.21				
1.2	1.91	1.33	1.43	1.52	1.55	1.64			
1.4	2.47	1.67	1.70	2.04	1.86	1.98	2.47		
1.6	3.17	2.40	2.33	2.53	2.31	2.51	3.13	3.25	
1.8	3.85	3.37	2.89	3.23	3.09	3.03	3.30	3.74	4.11

Main, Coefficient C (See Note 8)

V_b/V_c	0.2	0.4	0.6	0.8	1.0	1.2	1.4	1.6	1.8
C	0.03	0.04	0.07	0.12	0.13	0.14	0.27	0.30	0.25

Note 8: A = Area (sq. in.), Q = Airflow (cfm), V = Velocity (fpm)

Table 6-10 LOSS COEFFICIENTS, DIVERGING JUNCTIONS (Cont.)

Use the velocity pressure (V_p) of the upstream section. Fitting loss (TP) = C × V_p

T. Tee, Rectangular Main to Round Branch

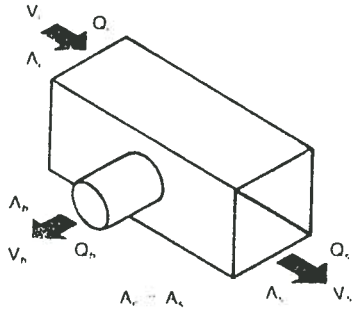

Branch, Coefficient C (See note 8)

V_b/V_c	Q_b/Q_c 0.1	0.2	0.3	0.4	0.5	0.6	0.7	0.8	0.9
0.2	1.00								
0.4	1.01	1.07							
0.6	1.14	1.10	1.08						
0.8	1.18	1.31	1.12	1.13					
1.0	1.30	1.38	1.20	1.23	1.26				
1.2	1.46	1.58	1.45	1.31	1.39	1.48			
1.4	1.70	1.82	1.65	1.51	1.56	1.64	1.71		
1.6	1.93	2.06	2.00	1.85	1.70	1.76	1.80	1.88	
1.8	2.06	2.17	2.20	2.13	2.06	1.98	1.99	2.00	2.07

For Main Loss Coefficient (C) see Fitting 6-10A (Page 6.27).

U. Wye, Rectangular (15)

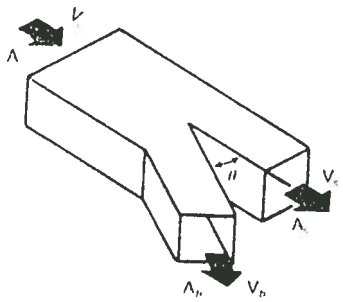

θ = 15° to 90°
A = A_c + A_b

Branch, Coefficient C (See Note 8)

θ	V_b/V_c 0.1	0.2	0.3	0.4	0.5	0.6	0.8	1.0	1.2	1.4	1.6	1.8	2.0
15°	0.81	0.65	0.51	0.38	0.28	0.20	0.11	0.06	0.14	0.30	0.51	0.76	1.0
30°	0.84	0.69	0.56	0.44	0.34	0.26	0.19	0.15	0.15	0.30	0.51	0.76	1.0
45°	0.87	0.74	0.63	0.54	0.45	0.38	0.29	0.24	0.23	0.30	0.51	0.76	1.0
60°	0.90	0.82	0.79	0.66	0.59	0.53	0.43	0.36	0.33	0.39	0.51	0.76	1.0
90°	1.0	1.0	1.0	1.0	1.0	1.0	1.0	1.0	1.0	1.0	1.0	1.0	1.0

Main, Coefficient C (See Note 8)

θ	15°-60°	90°				
V_c/V_c	A_c/A_c 0-1.0	0-0.4	0.5	0.6	0.7	0.8
0	1.0	1.0	1.0	1.0	1.0	1.0
0.1	0.81	0.81	0.81	0.81	0.81	0.81
0.2	0.64	0.64	0.64	0.64	0.64	0.64
0.3	0.50	0.50	0.52	0.52	0.50	0.50
0.4	0.36	0.36	0.40	0.38	0.37	0.36
0.5	0.25	0.25	0.30	0.28	0.27	0.25
0.6	0.16	0.16	0.23	0.20	0.18	0.16
0.8	0.04	0.04	0.17	0.10	0.07	0.04
1.0	0	0	0.20	0.10	0.05	0
1.2	0.07	0.07	0.36	0.21	0.14	0.07
1.4	0.39	0.39	0.79	0.59	0.39	—
1.6	0.90	0.90	1.4	1.2	—	—
1.8	1.8	1.8	2.4	—	—	—
2.0	3.2	3.2	4.0	—	—	—

Note 8: A = Area (sq. in.), Q = Airflow (cfm), V = Velocity (fpm)

Table 6-10 LOSS COEFFICIENTS, DIVERGING JUNCTIONS (Cont.)

Use the velocity pressure (V_p) of the upstream section. Fitting loss (TP) = C × V_p

V. Tee Rectangular Main to Conical Branch (2)

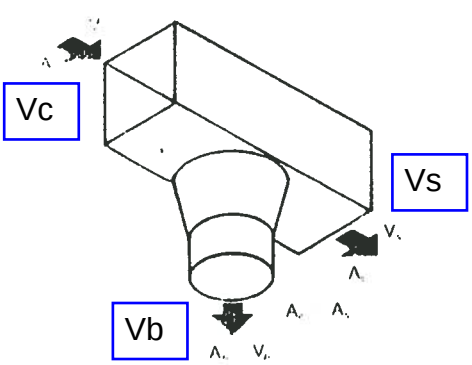

Vb/Vc

Branch, Coefficient C (See note 8)

V_b/V_c	0.40	0.50	0.75	1.0	1.3	1.5
C	0.80	0.83	0.90	1.0	1.1	1.4

For Main Loss Coefficient (C) see Fitting 6-10A (Page 6.27).

W. Wye, Rectangular (15)

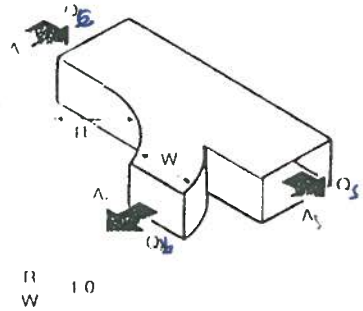

R/W 1.0

90 Branch

Branch, Coefficient C (See Note 8)

A_b/A_s	A_s/A_c	Q_b/Q_c 0.1	0.2	0.3	0.4	0.5	0.6	0.7	0.8	0.9
0.25	0.25	0.55	0.50	0.60	0.85	1.2	1.8	3.1	4.4	6.0
0.33	0.25	0.35	0.35	0.50	0.80	1.3	2.0	2.8	3.8	5.0
0.5	0.5	0.62	0.48	0.40	0.40	0.48	0.60	0.78	1.1	1.5
0.67	0.5	0.52	0.40	0.32	0.30	0.34	0.44	0.62	0.92	1.4
1.0	0.5	0.44	0.38	0.38	0.41	0.52	0.68	0.92	1.2	1.6
1.0	1.0	0.67	0.55	0.46	0.37	0.32	0.29	0.29	0.30	0.37
1.33	1.0	0.70	0.60	0.51	0.42	0.34	0.28	0.26	0.26	0.29
2.0	1.0	0.60	0.52	0.43	0.33	0.24	0.17	0.15	0.17	0.21

Main, Coefficient C (See Note 8)

A_b/A_s	A_s/A_c	Q_b/Q_c 0.1	0.2	0.3	0.4	0.5	0.6	0.7	0.8	0.9
0.25	0.25	-.01	-.03	-.01	0.05	0.13	0.21	0.29	0.38	0.46
0.33	0.25	0.08	0	-.02	-.01	0.02	0.08	0.16	0.24	0.34
0.5	0.5	-.03	-.06	-.05	0	0.06	0.12	0.19	0.27	0.35
0.67	0.5	0.04	-.02	-.04	-.03	-.01	0.04	0.12	0.23	0.37
1.0	0.5	0.72	0.48	0.28	0.13	0.05	0.04	0.09	0.18	0.30
1.0	1.0	-.02	-.04	-.04	-.01	0.06	0.13	0.22	0.30	0.38
1.33	1.0	0.10	0	0.01	-.03	-.01	0.03	0.10	0.20	0.30
2.0	1.0	0.62	0.38	0.23	0.13	0.08	0.05	0.06	0.10	0.20

X. Symmetrical Wye, Dovetail, Rectangular (15)

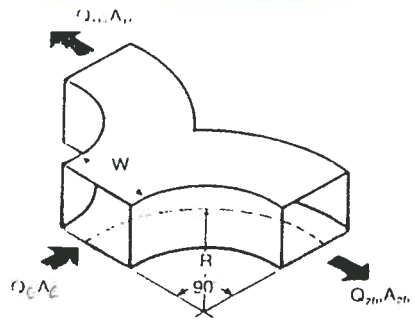

Coefficient C (See Note 8)

A_{1b}/A_c or A_{2b}/A_c	0.50	1.0
C	0.30	0.25

When: R/W = 1.5

$$\frac{Q_{1b}}{Q_c} = \frac{Q_{2b}}{Q_c} = 0.5$$

Note 8: A = Area (sq. in.), Q = Airflow (cfm), V = Velocity (fpm)

Table 6-10 LOSS COEFFICIENTS, DIVERGING JUNCTIONS (Cont.)

Use the velocity pressure (V^p) of the upstream section. Fitting loss (TP) = C × V_p

Y. Wye, Rectangular and Round (15)

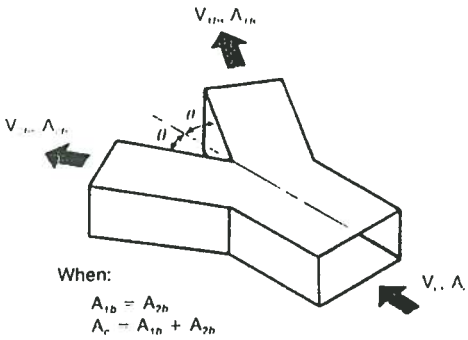

Coefficient C (See Note 8)

θ	V_{1b}/V_c or V_{2b}/V_c						
	0.1	0.2	0.3	0.4	0.5	0.6	0.8
15°	0.81	0.65	0.51	0.38	0.28	0.20	0.11
30°	0.84	0.69	0.56	0.44	0.34	0.26	0.19
45°	0.87	0.74	0.63	0.54	0.45	0.38	0.29
60°	0.90	0.82	0.79	0.66	0.59	0.53	0.43
90°	1.0	1.0	1.0	1.0	1.0	1.0	1.0

θ	V_{1b}/V_c or V_{2b}/V_c					
	1.0	1.2	1.4	1.6	1.8	2.0
15°	0.06	0.14	0.30	0.51	0.76	1.0
30°	0.15	0.15	0.30	0.51	0.76	1.0
45°	0.24	0.23	0.30	0.51	0.76	1.0
60°	0.36	0.33	0.39	0.51	0.76	1.0
90°	1.0	1.0	1.0	1.0	1.0	1.0

Z. Tee, Rectangular Reducing, 45° Entry Branch (2)

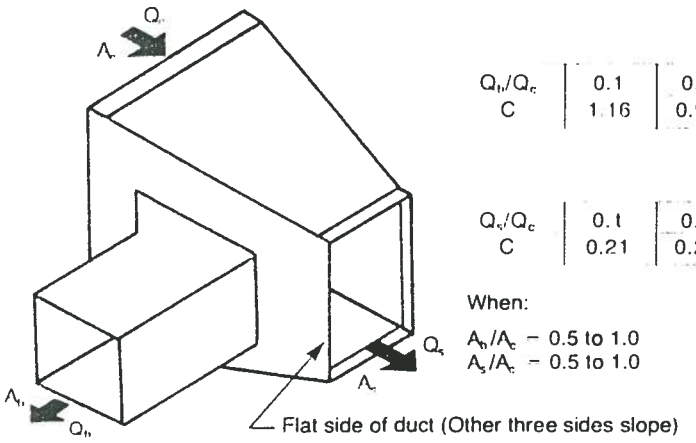

Branch, Coefficient C

Q_b/Q_c	0.1	0.2	0.3	0.4	0.5	0.6	0.7	0.8	0.9	1.0
C	1.16	0.96	0.82	0.68	0.56	0.49	0.47	0.48	0.50	0.54

Main, Coefficient C

Q_s/Q_c	0.1	0.2	0.3	0.4	0.5	0.6	0.7	0.8	0.9	1.0
C	0.21	0.20	0.20	0.20	0.20	0.20	0.22	0.25	0.35	0.53

When:

A_b/A_c = 0.5 to 1.0
A_s/A_c = 0.5 to 1.0

Table 6-11 LOSS COEFFICIENTS, ENTRIES

Use the velocity pressure (V_p) of the downstream section. Fitting loss (TP) = C × V_p

A. Duct Mounted in Wall, Round and Rectangular (15)

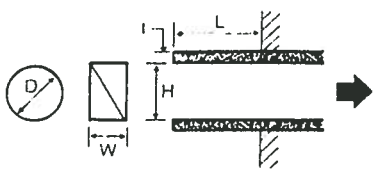

Rectangular: $D = \frac{2\,HW}{(H + W)}$

Coefficient C

t/D	L/D						
	0	0.002	0.01	0.05	0.2	0.5	≥ 1.0
≈ 0	0.50	0.57	0.68	0.80	0.92	1.0	1.0
0.02	0.50	0.51	0.52	0.55	0.66	0.72	0.72
≥ 0.05	0.50	0.50	0.50	0.50	0.50	0.50	0.50

With Screen or Perforated Plate:

a. Sharp Edge ($t/D_e \le 0.05$): $C_s = 1 + C_1$

b. Thick Edge ($t/D_e > 0.05$): $C_s = C + C_1$

where:

C_s is new coefficient of fitting with a screen or perforated plate at the entrance.
C is from above table
C_1 is from Table 6-13A (screen) or Table 6-13B (perforated plate)

Note 8: A = Area (sq. in.), Q = Airflow (cfm), V = Velocity (fpm)

Table 6-11 LOSS COEFFICIENTS, ENTRIES (Cont.)

Use the velocity pressure (V_p) of the downstream section. Fitting loss (TP) = C × V_p

B. Smooth Converging Bellmouth, Round, without End Wall (15)

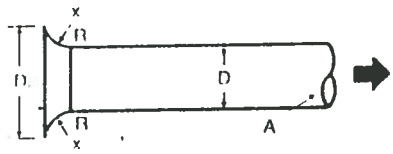

Coefficient C (See Note 9)

R/D	0	0.01	0.02	0.03	0.04	0.05
C	1.0	0.87	0.74	0.61	0.51	0.40

R/D	0.06	0.08	0.10	0.12	0.16	0.20 & greater
C	0.32	0.20	0.15	0.10	0.06	0.03

C. Smooth Converging Bellmouth, Round, with End Wall (15)

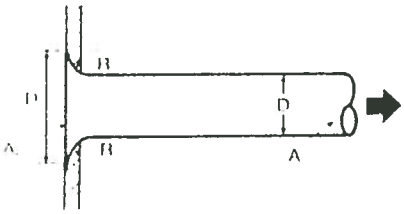

Coefficient C (See Note 9)

R/D	0	0.01	0.02	0.03	0.04	0.05
C	0.50	0.43	0.36	0.31	0.26	0.22

R/D	0.06	0.08	0.10	0.12	0.16	0.20 & greater
C	0.20	0.15	0.12	0.09	0.06	0.03

D. Conical, Converging Bellmouth, Round and Rectangular without End Wall (15)

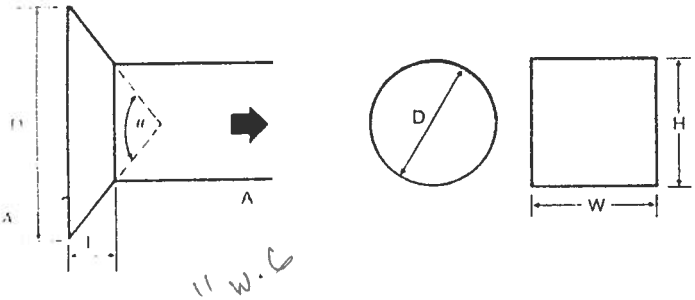

Rectangular: $D = \frac{2\,HW}{(H + W)}$

θ is major angle for rectangular entry

0.012" w.c

Coefficient C (See Note 9)

L/D	θ 0°	10°	20°	30°	40°	60°	100°	140°	180°
0.025	1.0	0.96	0.93	0.90	0.86	0.80	0.69	0.59	0.50
0.05	1.0	0.93	0.86	0.80	0.75	0.67	0.58	0.53	0.50
0.10	1.0	0.80	0.67	0.55	0.48	0.41	0.41	0.44	0.50
0.25	1.0	0.68	0.45	0.30	0.22	0.17	0.22	0.34	0.50
0.60	1.0	0.46	0.27	0.18	0.14	0.13	0.21	0.33	0.50
1.0	1.0	0.32	0.20	0.14	0.11	0.10	0.18	0.30	0.50

NOTE 9: With screen in opening at D_s: $C_s = C \text{ (from table)} + \dfrac{C \text{ (Screen coef. Table 6-13)}}{\left(\frac{A_s}{A}\right)^2}$

where A = Area at D; A_s = Area at D_s

Table 6-11 LOSS COEFFICIENTS, ENTRIES (Cont.)

Use the velocity pressure (V_p) of the downstream section. Fitting loss (TP) = C × V_p

E. Conical, Converging Bellmouth, Round and Rectangular, with End Wall (15)

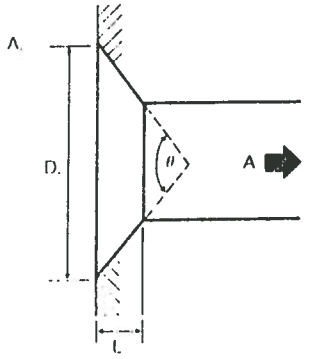

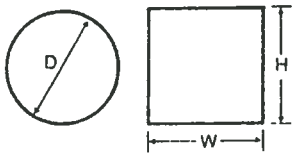

Rectangular: $D = \frac{2\,HW}{(H + W)}$

θ major angle for rectangular entry

Coefficient C (See Note 9)

L/D	θ 0°	10°	20°	30°	40°	60°	100°	140°	180°
0.025	0.50	0.47	0.45	0.43	0.41	0.40	0.42	0.45	0.50
0.05	0.50	0.45	0.41	0.36	0.33	0.30	0.35	0.42	0.50
0.075	0.50	0.42	0.35	0.30	0.26	0.23	0.30	0.40	0.50
0.10	0.50	0.39	0.32	0.25	0.22	0.18	0.27	0.38	0.50
0.15	0.50	0.37	0.27	0.20	0.16	0.15	0.25	0.37	0.50
0.60	0.50	0.27	0.18	0.13	0.11	0.12	0.23	0.36	0.50

F. Intake Hood (15)

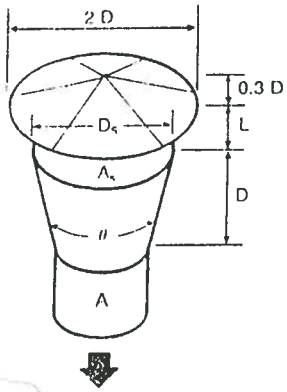

Coefficient C (See Note 9)

θ	L/D 0.1	0.2	0.3	0.4	0.5	0.6	0.7	0.8	0.9 or greater
0°	2.6	1.8	1.5	1.4	1.3	1.2	1.2	1.1	1.1
15°	1.3	0.77	0.60	0.48	0.41	0.30	0.29	0.28	0.25

G. Hood, Tapered, Flanged or Unflanged (2)

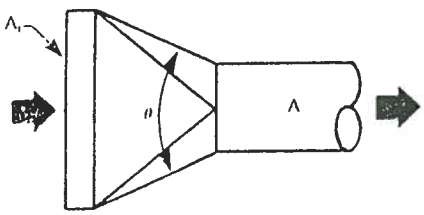

$A_1 \geq 2A$

θ is major angle for rectangular hoods

Coefficient C

θ	0°	20°	40°	60°	80°	100°	120°	140°	160°	180°
Round Hood	1.0	0.11	0.06	0.09	0.14	0.18	0.27	0.32	0.43	0.50
Square Hood or Recl. Hood	1.0	0.19	0.13	0.16	0.21	0.27	0.33	0.43	0.53	0.62

NOTE 9: With screen in opening at D_s, C_s = C (from table) + $\frac{\text{C (Screen coef. Table 6-13)}}{\left(\frac{A_s}{A}\right)^2}$

where: A = Area at D; A_s = Area at D_s

Table 6-11 LOSS COEFFICIENTS, ENTRIES (Cont.)

Use the velocity pressure (V_p) of the downstream section. Fitting loss (TP) = C × V_p

H. Hood, Canopy Island or Range

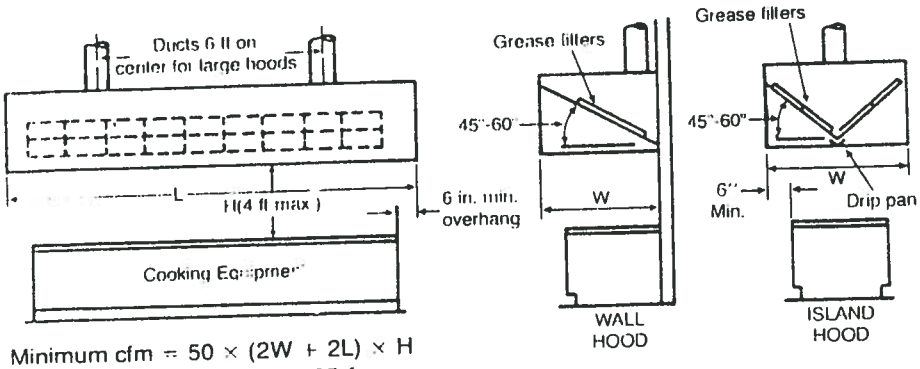

C = 0.5

(Total Entry Loss = C × V_p + clean filter resistance + 0.1 in. w.g.)

Minimum cfm = 50 × (2W + 2L) × H
Minimum face velocity = 125 fpm
Minimum duct velocity = 1000 fpm
(Use minimums from local codes where applicable)

I. Hood, Slot (Dishwasher)

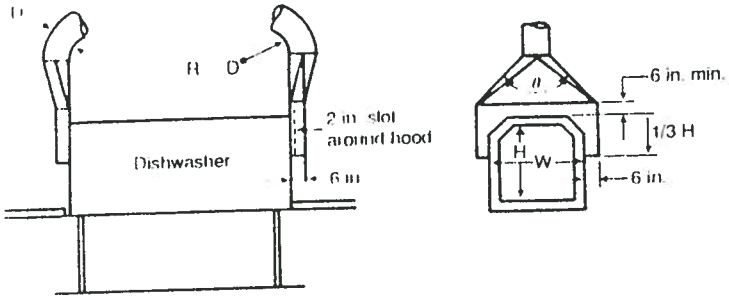

Use "C" loss coefficient from above Table 6-11 G. "Hood — Tapered, Flanged or Unflanged".
(Total Entry Loss = 1.0 × Slot V_p + C × Duct V_p)

Minimum cfm = 300 × H × W
Minimum duct velocity = 1000 fpm
(Use minimums from local codes where applicable)

Table 6-12 LOSS COEFFICIENTS, EXITS

Use the velocity pressure (V_p) of the upstream section. Fitting loss (TP) = C × V_p

A. Exhaust Hood (15)

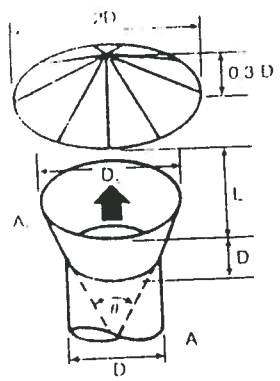

Coefficient C (See Note 9)

θ	L/D									
	0.1	0.2	0.25	0.3	0.35	0.4	0.5	0.6	0.8	1.0
0°	4.0	2.3	1.9	1.6	1.4	1.3	1.2	1.1	1.0	1.0
15°	2.6	1.2	1.0	0.80	0.70	0.65	0.60	0.60	0.60	0.60

NOTE 9: With screen in opening at D_s, C_s = C (from table) + $\frac{C \text{ (Screen coef. Table 6-13)}}{\left(\frac{A_s}{A}\right)^2}$
where: A = Area at D; A_s = Area at D_s

Table 6-12 LOSS COEFFICIENTS, EXITS (Cont.)
Use the velocity pressure (V_p) of the upstream section. Fitting loss (TP) = C × V_p

B. Exit, Conical, Round, with or without a Wall (15)

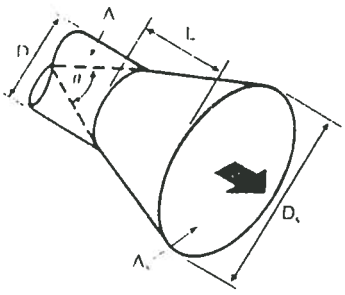

Coefficient C (See Note 9)

A_s/A	θ 14°	16°	20°	30°	45°	60°	90°
2	0.33	0.36	0.44	0.74	0.97	0.99	1.0
4	0.24	0.28	0.36	0.54	0.94	1.0	1.0
6	0.22	0.25	0.32	0.49	0.94	0.98	1.0
10	0.19	0.23	0.30	0.50	0.94	0.72	1.0
16	0.17	0.20	0.27	0.49	0.94	1.0	1.0

C. Exit, Plane Diffuser, Rectangular, with or without a Wall (15)

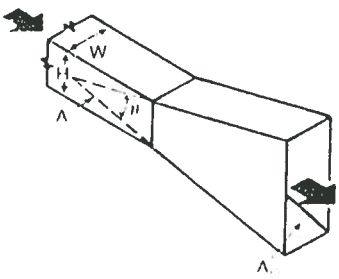

Coefficient C (See Note 10)

A_s/A	θ 14°	20°	30°	45°	60°	90°
2	0.37	0.38	0.50	0.75	0.90	1.1
4	0.25	0.37	0.57	0.82	1.0	1.1
6	0.28	0.47	0.64	0.87	1.0	1.1

When: 0.5 < H/W ≤ 2.0

Exit, Pyramidal Diffuser, Rectangular, with or without a Wall (15)

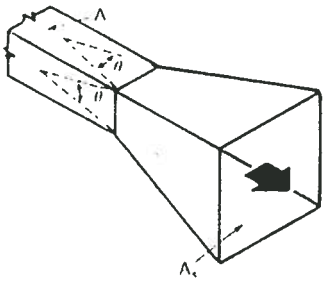

Coefficient C (See Note 10)

A_s/A	θ 10°	14°	20°	30°	45°	60°
2	0.44	0.58	0.70	0.86	1.0	1.1
4	0.31	0.48	0.61	0.76	0.94	1.1
6	0.29	0.47	0.62	0.74	0.94	1.1
10	0.26	0.45	0.60	0.73	0.89	1.0

NOTE 10: With screen in opening at A_s, C_s = C (from table) + $\dfrac{\text{C (Screen coef. Table 6-13)}}{\left(\dfrac{A_s}{A}\right)^2}$

Table 6-12 LOSS COEFFICIENTS, EXITS (Cont.)

Use the velocity pressure (V^p) of the upstream section. Fitting loss (TP) = C × V_p

E. Exit, Discharge to Atmosphere from a 90° Elbow, Round and Rectangular (15)

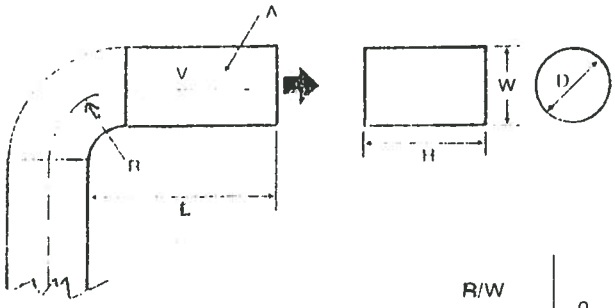

Note:
Elbow loss included in loss coefficient.

RECTANGULAR: Coefficient C (See Note 11)

R/W	L/W 0	0.5	1.0	1.5	2.0	3.0	4.0	6.0	8.0	12.0
0	3.0	3.1	3.2	3.0	2.7	2.4	2.2	2.1	2.1	2.0
0.75	2.2	2.2	2.1	1.8	1.7	1.6	1.6	1.5	1.5	1.5
1.0	1.8	1.5	1.4	1.4	1.3	1.3	1.2	1.2	1.2	1.2
1.5	1.5	1.2	1.1	1.1	1.1	1.1	1.1	1.1	1.1	1.1
2.5	1.2	1.1	1.1	1.0	1.0	1.0	1.0	1.0	1.0	1.0

ROUND: Coefficient C (See Note 10)

L/D	0.9	1.3
C	1.5	1.4

When:
R/D = 1.0 (Round)

F. Exit, Duct Flush with Wall, Flow along Wall (15)

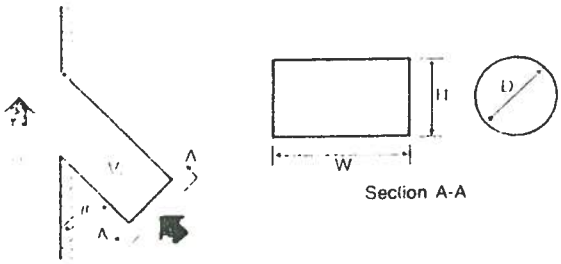

Section A-A

RECTANGULAR:

Coefficient C (See Note 11)

Aspect Ratio (H/W)	θ	V/V_o 0	0.5	1.0	1.5	2.0
0.1-0.2	30°-90°	1.0	0.95	1.2	1.5	1.8
	120°	1.0	0.92	1.1	1.4	1.9
	150°	1.0	0.75	0.95	1.4	1.8
0.5-2.0	30°-45°	1.0	1.0	1.1	1.3	1.6
	60°	1.0	0.90	1.1	1.4	1.6
	90°	1.0	0.80	0.95	1.4	1.7
	120°	1.0	0.80	0.95	1.3	1.7
	150°	1.0	0.82	0.83	1.0	1.3
5-10	45°	1.0	0.92	0.93	1.1	1.3
	60°	1.0	0.87	0.87	1.0	1.3
	90°	1.0	0.82	0.80	0.97	1.2
	120°	1.0	0.80	0.76	0.90	0.98

ROUND: Coefficient C (See Note 10)

θ	V/V_o 0	0.5	1.0	1.5	2.0
30°-45°	1.0	1.0	1.1	1.3	1.6
60°	1.0	0.90	1.1	1.4	1.6
90°	1.0	0.80	0.95	1.4	1.7
120°	1.0	0.80	0.95	1.3	1.7
150°	1.0	0.82	0.83	1.0	1.3

NOTE 11: With screen in opening C_s = C (from table) + C (Screen Coef. from Table 6-13)

Table 6-12 LOSS COEFFICIENTS, EXITS (Cont.)
Use the velocity pressure (V_p) of the upstream section. Fitting loss (TP) = C × V_p

G. Plane Asymmetric Diffuser at Fan Outlet without Ductwork (15)

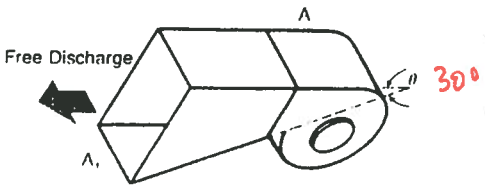

Coefficient C (See Note 12)

θ	A_1/A					
	1.5	2.0	2.5	3.0	3.5	4.0
10°	0.51	0.34	0.25	0.21	0.18	0.17
15°	0.54	0.36	0.27	0.24	0.22	0.20
20°	0.55	0.38	0.31	0.27	0.25	0.24
25°	0.59	0.43	0.37	0.35	0.33	0.33
30°	0.63	0.50	0.46	0.44	0.43	0.42
35°	0.65	0.56	0.53	0.52	0.51	0.50

H. Pyramidal Diffuser at Fan Outlet without Ductwork (15)

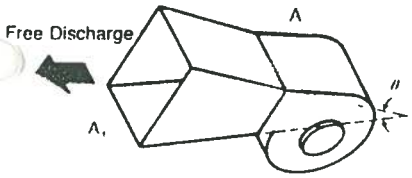

Coefficient C (See Note 12)

θ	A_1/A					
	1.5	2.0	2.5	3.0	3.5	4.0
10°	0.54	0.42	0.37	0.34	0.32	0.31
15°	0.67	0.58	0.53	0.51	0.50	0.51
20°	0.75	0.67	0.65	0.64	0.64	0.65
25°	0.80	0.74	0.72	0.70	0.70	0.72
30°	0.85	0.78	0.76	0.75	0.75	0.76

I. Fan, Free Discharge, Plenum

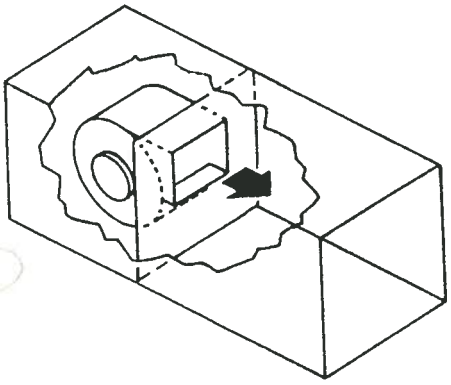

C 1.0 (Airfoil wheels—Backwardly inclined)
C 1.5 (Backwardly inclined wheels)
C 1.8 (Forward curved wheels)

J. Exit, Abrupt, Round and Rectangular, with or without a Wall (15)

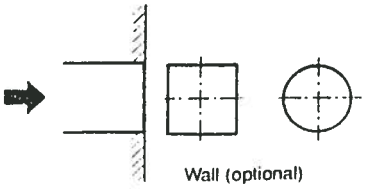

C = 1.0
With Screen: $C_s = 1 +$ (C from Table 6-13)

NOTE 12: With screen in opening at A_1, C_s = C (from table) + C $\dfrac{\text{(Screen coef. Table 6-13)}}{\left(\dfrac{A_1}{A}\right)^2}$

Table 6-13 LOSS COEFFICIENTS, SCREENS AND PLATES

Use the velocity pressure (V_p) of the upstream section. Fitting loss (TP) = C × V_p

A. Screen in Duct, Round and Rectangular (15)

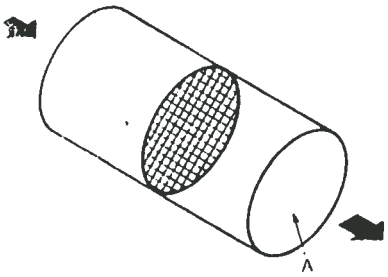

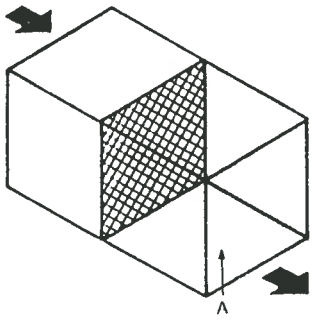

$n = A_s/A$

Where:

n = Free area ratio of screen

A_s = Total flow area of screen

A = Area of Duct

Coefficient C

n	0.30	0.40	0.50	0.55	0.60	0.65	0.70	0.75	0.80	0.90	1.0
C	6.2	3.0	1.7	1.3	0.97	0.75	0.58	0.44	0.32	0.14	0

B. Perforated Plate in Duct, Thick, Round and Rectangular (15)

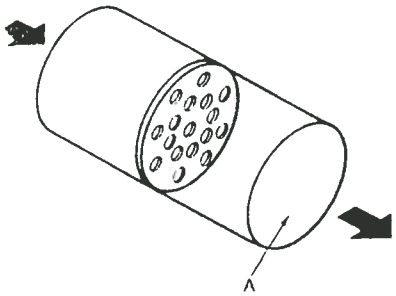

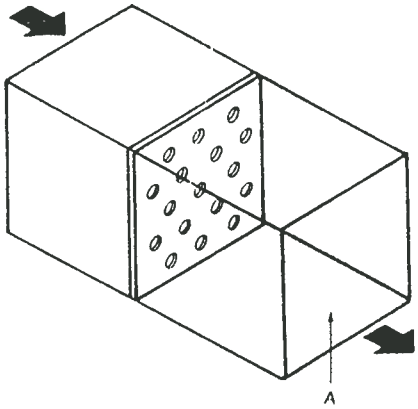

Coefficient C

t/d	n								
	0.20	0.25	0.30	0.40	0.50	0.60	0.70	0.80	0.90
0.015	52	30	18	8.2	4.0	2.0	0.97	0.42	0.13
0.2	48	28	17	7.7	3.8	1.9	0.91	0.40	0.13
0.4	46	27	17	7.4	3.6	1.8	0.88	0.39	0.13
0.6	42	24	15	6.6	3.2	1.6	0.80	0.36	0.13

t/d > 0.015

$n = \frac{A_p}{A}$

Where:

t = plate thickness

d = diameter of perforated holes

n = free area ratio of plate

A_p = total flow area of perforated plate

A = area of duct

Table 6-14 LOSS COEFFICIENTS, OBSTRUCTIONS (Constant Velocities)

Use the velocity pressure (V_p) of the upstream section. Fitting loss (TP) = C × V_p

A. Damper, Butterfly, Thin Plate, Round (15)

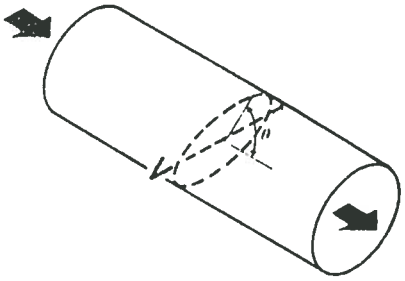

Coefficient C

θ	0°	10°	20°	30°	40°	50°	60°
C	0.20	0.52	1.5	4.5	11	29	108

0° is full open

B. Damper, Butterfly, Thin Plate, Rectangular (15)

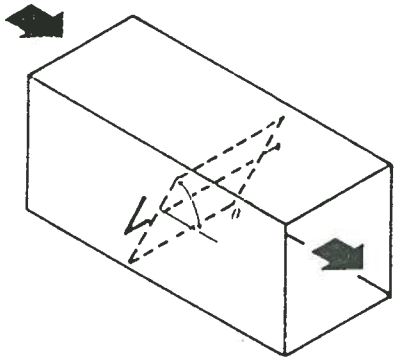

Coefficient C

θ	0°	10°	20°	30°	40°	50°	60°
C	0.04	0.33	1.2	3.3	9.0	26	70

0° is full open

0.007"

C. Damper, Gate, Round (15)

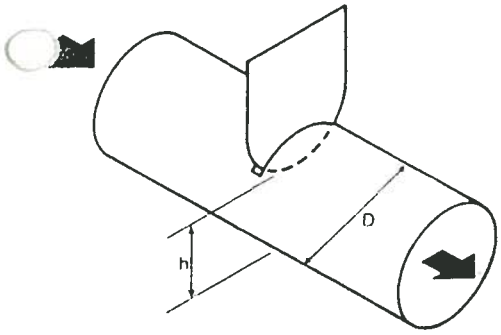

Coefficient C

h/D	0.2	0.3	0.4	0.5	0.6	0.7	0.8	0.9
A_h/A	0.25	0.38	0.50	0.61	0.71	0.81	0.90	0.96
C	35	10	4.6	2.1	0.98	0.44	0.17	0.06

A_h = Free Area
A = Area of Duct

Table 6-14 LOSS COEFFICIENTS, OBSTRUCTIONS (Constant Velocities) (Cont.)

Use the velocity pressure (V_p) of the upstream section. Fitting loss (TP) = C × V_p

D. Damper, Gate, Rectangular (15)

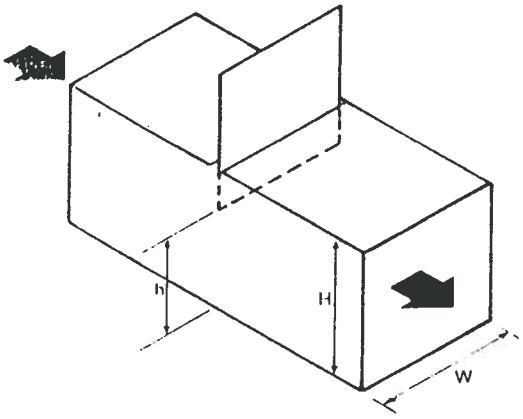

Coefficient C

H/W	h/H 0.3	0.4	0.5	0.6	0.7	0.8	0.9
0.5	14	6.9	3.3	1.7	0.83	0.3[illegible]	0.09
1.0	19	8.8	4.5	2.4	1.2	0.5[illegible]	0.17
1.5	20	9.1	4.7	2.7	1.2	0.47	0.11
2.0	18	8.8	4.5	2.3	1.1	0.51	0.13

E. Damper, Rectangular, Parallel Blades (2)

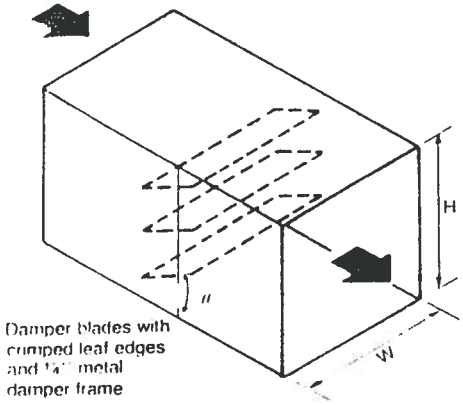

Damper blades with crimped leaf edges and 1/4" metal damper frame

Coefficient C

L/R	θ 80°	70°	60°	50°	40°	30°	20°	10°	0° Fully open
0.3	116	32	14	9.0	5.0	2.3	1.4	0.79	0.52
0.4	152	38	16	9.0	6.0	2.4	1.5	0.85	0.52
0.5	188	45	18	9.0	6.0	2.4	[illegible].5	0.92	0.52
0.6	245	45	21	9.0	5.4	2.4	1.5	0.92	0.52
0.8	284	55	22	9.0	5.4	2.5	1.5	0.92	0.52
1.0	361	65	24	10	5.4	2.6	1.6	1.0	0.52
1.5	576	102	28	10	5.4	2.7	1.6	1.0	0.52

$$\frac{L}{R} = \frac{N\,W}{2\,(H + W)}$$

where:

N is number of damper blades
W is duct dimension parallel to blade axis
L is sum of damper blade lengths
R is perimeter of duct
H is duct dimension perpendicular to blade axis

F. Damper, Rectangular, Opposed Blades (2)

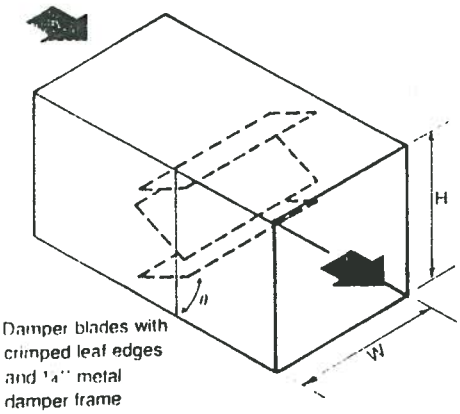

Damper blades with crimped leaf edges and 1/4" metal damper frame

Coefficient C

L/R	θ 80°	70°	60°	50°	40°	30°	20°	10°	0° Fully open
0.3	807	284	73	21	9.0	4.1	2.1	0.85	0.52
0.4	915	332	100	28	11	5.0	2.2	0.92	0.52
0.5	1045	377	122	33	13	5.4	2.3	1.0	0.52
0.6	1121	411	148	38	14	6.0	2.3	1.0	0.52
0.8	1299	495	188	54	18	6.6	2.4	1.1	0.52
1.0	1521	547	245	65	21	7.3	2.7	1.2	0.52
1.5	1654	677	361	107	28	9.0	3.2	1.4	0.52

$$\frac{L}{R} = \frac{N\,W}{2\,(H + W)}$$

where:

N is number of damper blades
W is duct dimension parallel to blade axis
L is sum of damper blade lengths
R is perimeter of duct
H is duct dimension perpendicular to blade axis

Table 6-14 LOSS COEFFICIENTS, OBSTRUCTIONS (Constant Velocities) (Cont.)
Use the velocity pressure (V_p) of the upstream section. Fitting loss (TP) = C × V_p

J. Rectangular Duct, Depressed to Avoid an Obstruction

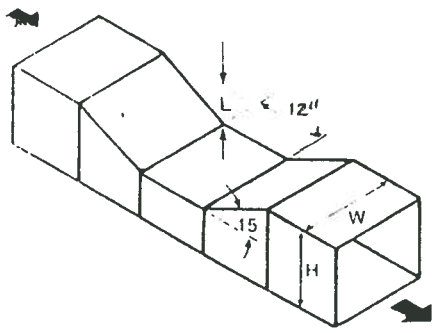

Coefficient C

W/H	L/H 0.125	0.15	0.25	0.30
1.0	0.26	0.30	0.33	0.35
4.0	0.10	0.14	0.22	0.30

K. Rectangular Duct with 4-45° Smooth Radius Ells to Avoid an Obstruction

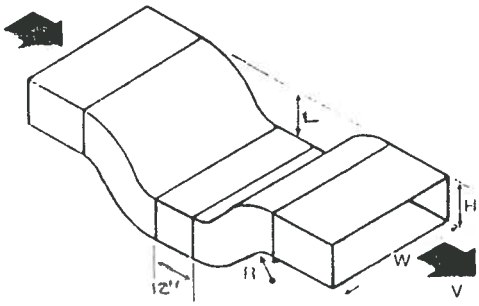

Coefficient C

V (fpm)	800	1200	1600	2000	2400
C	0.18	0.22	0.24	0.25	0.26

Where:

W/H = 4
R/H = 1
L/H = 1.5

L. Rectangular Duct with 4-90° Mitered Ells to Avoid an Obstruction

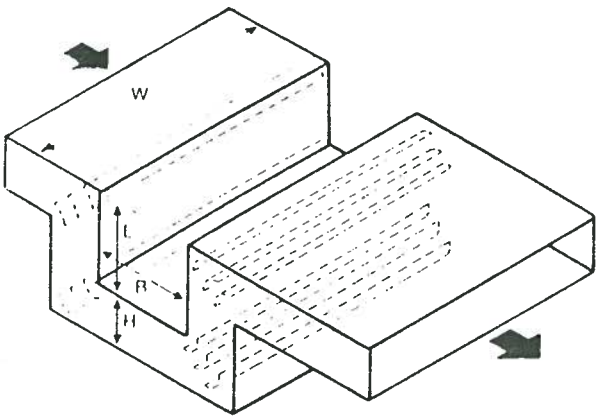

Coefficient C

L/H Ratio	0.5	1.0	1.5	2
Single Blade Turning Vanes	—	0.86	0.83	0.77
Double Blade Turning Vanes	—	1.85	2.84	2.91
"S" type Splitter Vanes	0.61	0.65	—	—
No Vanes — Up to 1200 fpm	0.88	5.26	6.92	7.56
No Vanes — Over 1200 fpm	1.26	6.22	8.82	9.24

Where: W/H = 1.0 to 3.0
B = 12" to 24"

Table 6-14 LOSS COEFFICIENTS, OBSTRUCTIONS (Constant Velocities) (Cont.)

Use the velocity pressure (V_p) of the upstream section. Fitting loss (TP) = C × V_p

G. Damper, Butterfly, Airfoil Blade, Rectangular (15)

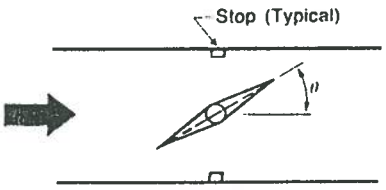

Coefficient C

θ	0°	10°	20°	30°	40°	50°	60°
C	0.50	0.65	1.6	4.0	9.4	24	67

H. Obstruction, Smooth Cylinder in Round and Rectangular Ducts (15)

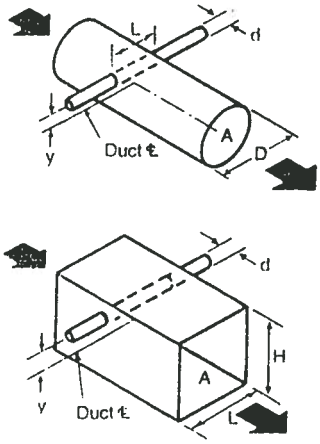

Coefficient C_o

R_e	S_m/A .05	.10	.15	.20
0.1	3.9	8.4	14	19
0.5	1.5	3.2	5.2	7.1
1	0.66	1.4	2.3	3.2
5	0.30	0.64	1.1	1.4
10	0.17	0.38	0.62	0.84
50	0.11	0.24	0.38	0.52
100	0.10	0.24	0.35	0.47
(0.5-200) × 10^3	0.07	0.15	0.24	0.33
3 × 10^5	0.07	0.16	0.26	0.35
4 × 10^5	0.05	0.11	0.19	0.25
5 × 10^5	0.04	0.09	0.14	0.19
(6-10) · 10^5	0.02	0.05	0.07	0.10

where:

S_m = d L
R_e = 8.56 DV (Std. Air)
S_m/A < 0.3
C = K C_o
A = Area of duct

For obstruction offset from the centerline use the following factors:

y/D or y/H	0	0.05	0.10	0.15	0.20	0.25	0.30	0.35	0.40
K	1.0	0.97	0.93	0.89	0.84	0.79	0.74	0.67	0.58

I. Round Duct, Depressed to Avoid an Obstruction

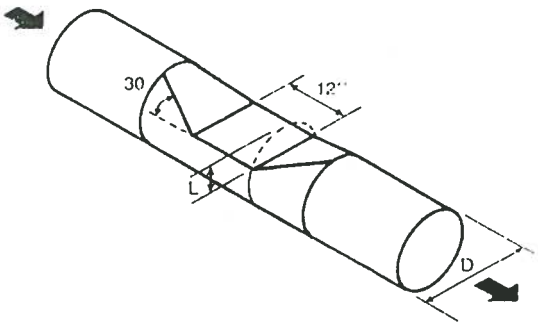

When: L/D = 0.33
C = 0.24